VENTILATION & BLEEDING VALVES

AIR VALVES

CHECK VALVES

SEWAGE PUMPING STATIONS

STRATE RANGE

PRICE LIST

2020

TALIS

INDEX

04 THE STRATE BRAND

06 AREA SALES CONTACT

08 IMPORTANT INFORMATION

11 STRATE PRODUCT OVERVIEW

56 SALES AND DELIVERY CONDITIONS

STRATE – INNOVATIVE SEWAGE TECHNOLOGY

STRATE BY TALIS

For more than 70 years, STRATE has stood for innovative and comprehensive product and problem-solving competence in sewage technology.

Emerging from the company Wilhelm Strate VDI, founded in 1949, and the later STRATE Maschinenfabrik für Abwassertechnik GmbH, the company initially manufactured, maintained and repaired cooling systems, air conditioning compressors and industrial compressed air systems.

In 1954, elastic pipe feedthroughs for pressure pipelines were developed at the request of customers and were used for the first time in sewage pressure pipelines.

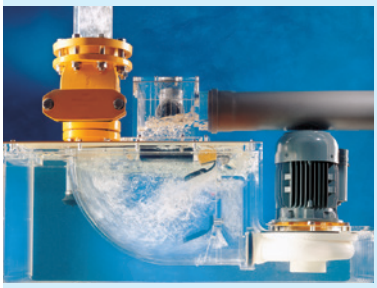

The company subsequently developed sewage pumping stations with the patented separator system, which effectively protects the pumps used from clogging. AWA-LIFT sewage lifting units are today the best known STRATE products, which is proven by over 35,000 units sold. Due to the optimum protection against clogging and the high pump efficiencies, they make a significant contribution to saving energy and maintenance costs.

Non-return valves as well as aeration and venting valves of all sizes were also developed in close contact with the customer and round off the company's sewage program. In the industrial sector STRATE supplies blower and compressor manufacturers with non-return valves and start-up relief valves for air and technical gases.

The STRATE service offers the customer a comprehensive range of services, from new installation and regular maintenance to the renovation and reconstruction of existing plants. The distribution of spare parts, naturally also for old plants, and an extensive fault diagnosis round off the service concept.

Current environmental regulations and the conscious use of valuable resources constantly require new, competent solutions and present cities, municipalities, industry and private households with a number of challenges. STRATE is the expert for innovative sewage and environmental technology.

Today, the company mainly supplies customers in the European markets, with Germany, the Netherlands, Great Britain, Italy, Poland, the Czech and Slovak Republics as well as Russia among the most important markets.

After the company was founded in Hanover-Wülfel, it was able to develop further in Laatzen-Rethen from the end of the 1950s, before moving to its current location in Sarstedt from 1992 to 1996.

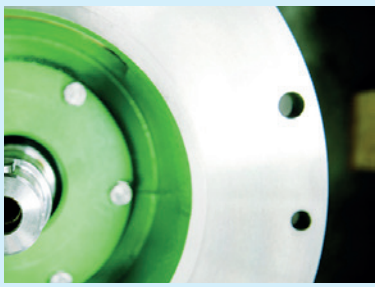

Products for the waste water industry are the focus of STRATE at the Sarstedt site.

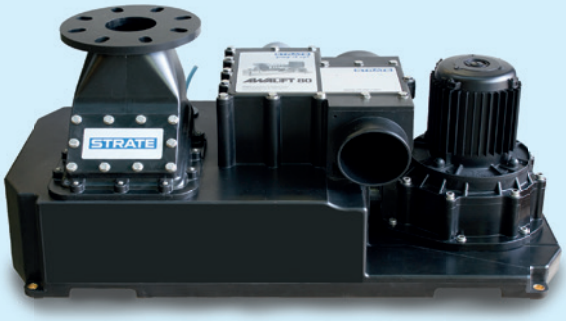

AWALIFT sewage lifting units are the main focus of the STRATE range, which is supplemented by other products such as special aeration and venting valves for sewage technology.

YOUR AREA SALES CONTACT
FOR STRATE

HEAD OF EXPORT

Wolfgang Beckmann
Manager Export & Business Development

STRATE Technologie für Abwasser
Im Kirchenfelde 9
31157 Sarstedt
Telephone +49 5066 988 201
Mobile +49 1590 488 8179
Fax +49 5066 988 225
wbeckmann@talis-group.com
https://www.strate.com/

BELGIUM

Edo Pumps nv
Kerkhofstraat 238
2850 Boom
https://www.edopumps.be/

CROATIA

AQUALINE d.o.o.
Franje Tudmana 20
48260 Krizevci
https://aqualine.com.hr/

CZECH REPUBLIC

EuroArmatury s.r.o.
Vitazna 394/44
958 04 Partizanske 4
http://www.euroarmatury.eu/

DENMARK

VA Tech 2000
Værkstedsvej 15
5500 Middelfart
https://www.vatech.dk/

FRANCE -ONLY VALVES-

Bayard
Avenue Lionel Terray
69881 Meyzieu
https://www.bayard.fr/

INDIA

TALIS Valves India Pvt. Ltd.
Gachibowli Miyapur Rd.
500-032 Hyderabad
https://www.talis-group.com/

ISRAEL

Raphael Valves Industries Ltd.
Northern Industrial Zone
30600 Or Akiva - Israel
http://www.raphael-valves.com/

ITALY

Bautechnik GmbH - Srl
E-Fermi-Str. 22
39100 Bozen
https://bautechnik.it/it/

LITHUANIA

Eccua, UAB
Kulautuvos g. 20
47192 Kaunas
https://www.eccua.lt/

NETHERLANDS -ONLY VALVES-

TALIS BENELUX B.V.
Rozenobel 15
5986 PA Beringe
https://www.talis-benelux.com/nl.html

NORWAY -ONLY VALVES-

Sigum Fagerberg AS.
Arvollskogen 33
1529 Moss
http://www.sigumfagerberg.no/

POLAND

Corol Sp. z o.o.
ul. Gnieznienska 67/69
62-006 Kobylnica
http://www.corol.pl/

POLAND

INSBUD-RYBNIK II
ul. Sosnowa 29
44-203 Rybnik
http://insbud.rybnik.pl/

POLAND

Macrotec Sp. Z.o.o.
ul. M. Reja 3
80-404 Danzig
www.macrotec.pl

RUSSIA

VODACO
Altufevkoe shosse 48/2
127556 Moskau
http://www.vodaco.de/page-_en.html

SWEDEN -ONLY VALVES-

KLINGER
Kontovägen 3
17562 Järvälla
https://www.klinger.se/sv/

SWEDEN -ONLY AWALIFT-

Torell Pump AB
Hammerby Allé 93
12063 Stockholm
https://torellpump.se/

SLOVAKIA

EuroArmatury s.r.o.
Vitazna 394/44
958 04 Partizanske 4
http://www.euroarmatury.eu/

SLOVENIA

AQUALINE d.o.o.
Franje Tudmana 20
48260 Krizevci
https://aqualine.com.hr/

SOUTH AFRICA

Ernest Lowe ELCO RSA
6 Skew Road - Anderbolt
1460 Johannesburg
http://www.elco.co.za/

SWITZERLAND -ONLY VALVES-

WILD Armaturen AG
Industrie Büch 31
8645 Jona - Rapperswil
https://www.wildarmaturen.ch/

UNITED KINGDOM

COUGAR PUMPS
1 Riverpark Industrial Estate, Billet Lane
HP41HL Berkhamsted, Herts.
https://www.cougar-global.com/

UNITED KINGDOM -ONLY VALVES-

TALIS UK
South Drive
B461DL Coleshill
https://www.talis-uk.com/

IMPORTANT INFORMATION
TO THE PRICE LIST 2020

Please note also the sales and delivery conditions at the end of the price list.

With this issue, all previous issues of the price list become invalid. This price list contains only a part of our product range. If you would like to receive documents about our products that you cannot find in this price list, please contact us or your local sales office.

Technical progress constantly brings about changes and improvements which are taken into account in the production of our valves. We reserve the right to make changes or use materials of equal or higher quality.

Safe operation and maintenance instructions are decisive for proper installation. Resellers are obliged to pass on these instructions.

The illustrations are not binding for the design.

Please quote all operating data when making enquiries and placing orders.

Minimum order value

Please note that in view of the generally known cost situation, we can only execute small orders below a minimum order value of € 250,- net against payment of a processing fee of € 75,-.

Packaging costs

Our products require packaging as protection against transport damage. Costs for this are not included in the prices quoted and will be charged according to expenditure.

Pricing

Our prices are ex works excluding packaging.

Return deliveries

Return deliveries for credit note can only be made with the prior written consent of the supplier. For return deliveries with a value of less than € 500 (list price) no credit note will be issued. Likewise, no credit note will be issued for valves or fittings that are no longer included in the delivery programme, as well as for accessories, valves or fittings from individual production or for return deliveries that are made more than 12 months after the original delivery. In the case of freight-free return of stocked, new valves or fittings, a credit note of a maximum of 60% of the invoice value will be issued if the return delivery is made within 6 months of the original delivery. In addition, the Supplier shall be entitled to deduct or charge all costs incurred as a result of the return by the Supplier, in particular outward and return freight, freight compensation amounts, cartage, carrier costs, reconditioning costs, discounts reduced upon payment, etc. from the net invoice price to be refunded. Custom-made products are generally excluded from cancellations and returns.

PRODUCT OVERVIEW

VENTILATION & BLEEDING VALVES **12**

AIR VALVES **14**

CHECK VALVES **16**

SEWAGE PUMPING STATIONS **20**

BUILDING TECHNOLOGY 20

PUBLIC BUILDINGS & MUNICIPAL APPLICATIONS 28

MUNICIPAL APPLICATIONS 40

SHAFTS 55

VENTILATION & BLEEDING VALVES FOR SEWAGE TECHNOLOGY

SERIES **0240110**

- BEV 220= 3 functions Bleed + ventilate, Operational Ventilation
- Large air flow outlet
- Nominal pressure 10bar, Operating pressure max. 3bar
- Flange drilling according to EN1092-2 and ISO 7005-2 ISO PN 10/16
- With connection adapter

AVUSE BEV220

STRATE RANGE

DN	PN	WEIGHT (KG)	MAT.-NR.	TALIS-CODE	PRICE (€)
TYP 220-DN50					
50	10	5	5730006720	5730006720	1.535,00
TYP 220-DN60/65/80					
80	10	6	5730007720	5730007720	1.535,00

- Ventilation valve with lower WEIGHT (kg)= easy handling and simple maintenance
- High quality polymer material
- Protected ventilation area

SERIES **0240110**

- Ventilation valve for fine ventilation
- Flange drilling according to EN 1092-2 and ISO 7005-2 ISO PN 10/16
- Type 20-F-50 = 20 m3/h Venting volume
- Type 40-2F-80 = 40 m3/h Venting volume
- Operating pressure 2bar / 4bar / 6bar
- other pressure stages on request

BEV-F

STRATE RANGE

SINGLE-STAGE VALVE FOR FINE VENTILATION

DN	PN	WEIGHT (KG)	MAT.-NR.	TALIS-CODE	PRICE (€)
TYP 20-F-50					
50	10	28	5700001303	5700001303	1.165,00
TYP 40-2F-80					
80	10	60	5780001303	5780001303	2.270,00

- Tailor-made solutions for sewage water
- Discharges air and gases that accumulate at high points of the sewage water pressure line

VENTILATION & BLEEDING VALVES FOR SEWAGE

SERIES **0240110**

- Ventilation valve for coarse ventilation
- Flange drilling according to EN 1092-2 and ISO 7005-2 ISO PN 10/16
- Type 450-G-50 = 450 m3/h Vent volume
- Type 1000-G-100 = 1000 m3/h Venting volume
- Type 2000-G-150 = 2000 m3/h Venting rate

BEV-G

STRATE RANGE

SINGLE-STAGE VALVE FOR COARSE VENTILATION

DN	PN	WEIGHT (KG)	MAT.-NR.	TALIS-CODE	PRICE (€)
TYP 450-G-50					
50	10	27	5770001303	5770001303	1.255,00
TYP 1000-G-100					
100	10	60	5770010303	5770010303	3.020,00
TYP 2000-G-150					
150	10	70	5770020903	5770020903	5.820,00

- Tailor-made solution for sewage water
- Fast venting of the waste water pressure line at the beginning and fast venting at the end of the conveying process

SERIES **0240130**

- Ventilation valve combining fine ventilation (BEV-F) and coarse ventilation (BEV-GF)
- Flange drilling according to EN 1092-2 and ISO 7005-2 ISO PN 10/16
- Operating pressure 2bar / 4bar / 6bar
- other pressure stages on request

BEV-GF

STRATE RANGE

TWO-STAGE VENTILATION VALVE

DN	PN	1. VENTING-PHASE (M3/H)	2. VENTING-PHASE (M3/H)	WEIGHT (KG)	MAT.-NR.	TALIS-CODE	PRICE (€)
TYP 450/20-GF-80							
80	10	450	20	65	5790001303	5790001303	2.360,00
TYP 1000/20-GF-100							
100	10	1000	20	130	5760010303	5760010303	4.285,00
TYP 2000/40-GF-150							
150	10	2000	40	130	5760020903	5760020903	9.850,00

- Tailor-made solution for sewage water
- Optimum ventilation and deaeration of sewage water pressure lines, even under operating pressure

AIR VALVES

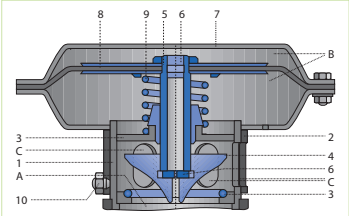

SERIES **EVA**

EVA
RELIEF VALVE

STRATE RANGE

Options

- With solenoid valve for different motor speeds:
  - With pressure relief valve
  - For higher pressures and temperatures

TYPE	PERFORMANCE (M3/MIN)	WEIGHT (KG)	MAT.-NR.	TALIS-CODE	PRICE (€)
10/S	10	2,8	5800010010	5800010010	815,00
30/S	30	4,4	5800030010	5800030010	1.165,00
60/S	60	9,9	5800060010	5800060010	1.370,00
150/S	150	36,0	5800150010	5800150010	2.240,00
10/E	10	3,2	5820010010	5820010010	1.105,00
30/E	30	8,2	5820030010	5820030010	1.525,00
60/E	60	10,7	5820060010	5820060010	1.740,00
150/E	150	37,4	5820150010	5820150010	2.590,00
10/U	10	3,5	5840010000	5840010000	1.485,00
30/U	30	8,4	5840030000	5840030000	1.855,00
60/U	60	11,0	5840060000	5840060000	2.225,00
150/U	150	37,8	5840150000	5840150000	3.090,00
10/EU	10	4,2	5850010000	5850010000	1.730,00
30/EU	30	9,4	5850030000	5850030000	2.195,00
60/EU	60	12,1	5850060000	5850060000	2.565,00
150/EU	150	39,6	5850150000	5850150000	3.420,00

S= Standard
E= With built-on magnetic valve
U= With adjustable pressure relief valve
EU= With adjustable pressure relief valve and mounted

- Provides for the relieved starting of rotary blowers and single-stage Screw compressors up to unit capacities of 160 m³/min.
- They are started if no soft start or no control via frequency converter is designed for direct starting or in star-delta connection The unit is strong is exposed to mechanical loads and requires a high starting current. During the A reduced back pressure should therefore be present during the start-up phase; this is achieved by Blow off the increasing volume flow.
- The fully automatic, medium-controlled STRATE EVA relief valve is specially designed for this Process constructed. It offers the advantage of being maintenance-free and also represents an extremely economic start-up relief, since the use of complex, externally controlled fittings or electronic starting aids can be omitted.

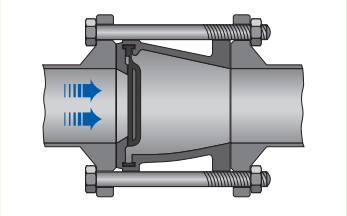

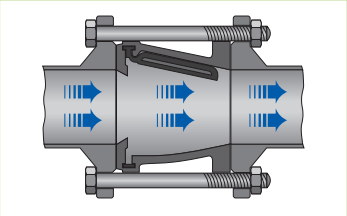

SERIES **RSK - SB**

TYP: SB

STRATE RANGE

SANDWICH-TYPE NON-RETURN VALVE FOR AIR AND TECHNICAL GASES

Options

- Special applications with changed material selection of the damper inserts on request

DN	TOTAL LENGTH (MM)	WEIGHT (KG)	MAT.-NR.	TALIS-CODE	PRICE (€)
SANDWICH-TYPE					
50	80	1,2	5610050000	5610050000	215,00
65	100	2,2	5610065000	5610065000	230,00
80	120	2,7	5610080000	5610080000	260,00
100	140	3,0	5610100000	5610100000	295,00
125	180	4,0	5610125000	5610125000	435,00
150	200	5,0	5610150000	5610150000	515,00
200	230	8,0	5610200000	5610200000	900,00
250	280	11,0	5610250000	5610250000	1.330,00

- Find worldwide recognition as a backflow preventer for universal applications in Conveying of air and gases for blowers and screw compressors.
  - Due to the sandwich construction for short construction lengths
  - Characterized by low flow resistance and high operational safety
  - Seals reliably even at low back pressures
  - Offer excellent economy and durability
- The STRATE sandwich swing check valves SB are suitable for use in the following applications due to their special, lightweight Aluminium construction and the use of silicone flap inserts ideal for:
  - The conveyance of air and gases up to temperatures of 200 °C
  - Operating pressures up to 4 bar

CHECK VALVES

SERIES **AWASTOP**

- Swing non-return valves dedicated to sewage and non-treated/service water
- Face to face according to DIN 3202
- Screwless flap fully rubberized in Butyl 100
- Flanges drilled according to EN 1092-2
- SO 7005-2 and DIN 2501
- Certificate LGA 0220138a

- 100% free passage and low flow resistance
- Silent operation
- High operational safety
- Easy maintenance
- Close safety at a low backpressure

AWASTOP
SWING CHECK VALVE

STRATE RANGE

DN	ISO PN / DRILLING	FTF DIM (MM)	WEIGHT (KG)	MAT.-NR.	TALIS-CODE	PRICE (€)
WORKING PRESSURE 10 BAR – BLUE EPOXY-COATING						
50	10/16	200	10	5620050303	5620050303	320,00
65	10/16	240	15	5620065303	5620065303	345,00
80	10/16	260	18	5620080303	5620080303	410,00
100	10/16	300	24	5620100303	5620100303	505,00
125	10/16	350	35	5620125303	5620125303	670,00
150	10/16	400	46	5620150303	5620150303	875,00
200	10	500	86	5620200303	5620200303	1.525,00
250	10	600	142	5620250303	5620250303	2.215,00
300	10	700	206	5620300303	5620300303	2.720,00

ACCESSORIES **LIFTING DEVICE**

PRODUCT	WEIGHT (KG)	MAT.-NR.	TALIS-CODE	PRICE(€)
LIFTING DEVICE FROM DN 50 UP TO DN 125	0,06	4RS0001890	4RS0001890	19,00
LIFTING DEVICE FROM DN 150 TO DN 300	0,27	4RS0000890	4RS0000890	70,00

SERIES **0250120**

- Swing non-return valves dedicated to sewage and non-treated/service water
- Face to face according to DIN 3202
- Flanges drilled according to EN 1092-2
- ISO 7005-2 and DIN 2501
- Working pressure PN 6 or PN 10 according to DN

Variants

- RSK standard execution: rubber flap
- RSK-FT version : spring-loading device
- RSK-U : shut-off bypass valve
- RSK-UD : pressure surge damping device
- RSK-FTU version : spring-loading device + shut-off valve
- RSK-FTUD version : spring-loading device + pressure surge damping device

- Low flow resistance design
- Minimum clogging tendency and easy maintenance
- Fail-safe closing of the disc even under high pressures
- Low and easy maintenance requirements
- Particularly suitable for «heavy-duty» applications

RSK
SWING CHECK VALVE

STRATE RANGE

DN	ISO PN/ DRILLING	FTF DIM (MM)	WEIGHT (KG)	MAT.-NR.	TALIS-CODE	PRICE (€)
RSK BASIC VERSION - WORKING PRESSURE 10 BAR – BLUE EPOXY-COATING						
80	10/16	260	23	5500080303	5500080303	1.210,00
RSK BASIC VERSION - WORKING PRESSURE 6 BAR – BLUE EPOXY-COATING						
500	10	1100	380	5501500903	5501500903	17.955,00
600	10	1300	495	5501600903	5501600903	25.195,00
700	10	1500	705	5501700903	5501700903	32.610,00
800	10	1700	990	5501800903	5501800903	35.960,00
900	10	please contact us				
RSK-FT-VERSION - WORKING PRESSURE 10 BAR – BLUE EPOXY-COATING						
80	10/16	260	30	5540080303	5540080303	2.755,00
RSK-FT-VERSION - WORKING PRESSURE 6 BAR – BLUE EPOXY-COATING						
500	10	1100	420	5541500903	5541500903	24.670,00
600	10	1300	530	5541600903	5541600903	30.760,00
700	10	1500	740	5541700903	5541700903	on request
800	10	1700	1025	5541800903	5541800903	on request
900	10	please contact us				
RSK-U-VERSION - WORKING PRESSURE 10 BAR – BLUE EPOXY-COATING						
100	10	300	33	5520100303	5520100303	1.865,00
125	10	350	42	5520125303	5520125303	2.165,00
150	10	400	57	5520150303	5520150303	2.555,00
200	10	500	120	5520200303	5520200303	3.290,00
250	10	600	178	5520250303	5520250303	5.020,00
300	10	700	260	5520300303	5520300303	5.470,00
350	10	800	317	5520350303	5520350303	6.935,00
RSK-U-VERSION - WORKING PRESSURE 6 BAR – BLUE EPOXY-COATING						
400*	10	900	250	5521400323	5521400323	7.935,00
500	10	1100	390	5521500903	5521500903	18.430,00
600	10	1300	505	5521600903	5521600903	25.135,00
700	10	1500	715	5521700903	5521700903	32.110,00
800	10	1700	1000	5521800903	5521800903	37.805,00
900	10	please contact us				
RSK-UD-VERSION - WORKING PRESSURE 10 BAR – BLUE EPOXY-COATING						
100	10	300	35	5530100303	5530100303	2.270,00
125	10	350	42	5530125303	5530125303	2.310,00
150	10	400	57	5530150303	5530150303	2.435,00
200	10	500	120	5530200303	5530200303	3.835,00
250	10	600	178	5530250303	5530250303	6.245,00
300	10	700	260	5530300303	5530300303	6.645,00
350	10	800	317	5530350303	5530350303	8.255,00
RSK-UD-VERSION - WORKING PRESSURE 6 BAR – BLUE EPOXY-COATING						

* = body and bonnet in cast iron

CHECK VALVES

RSK SWING CHECK VALVE

DN	ISO PN/ DRILLING	FTF DIM (MM)	WEIGHT (KG)	MAT.-NR.	TALIS-CODE	PRICE (€)
400	10	900	259	5531400323	5531400323	9.560,00
RSK-FTU-VERSION - WORKING PRESSURE 10 BAR – BLUE EPOXY-COATING						
100	10	300	43	5560100303	5560100303	3.390,00
125	10	350	56	5560125303	5560125303	3.475,00
150	10	400	69	5560150303	5560150303	3.855,00
200	10	500	131	5560200303	5560200303	5.460,00
250	10	600	186	5560250303	5560250303	8.510,00
300	10	700	281	5560300303	5560300303	9.220,00
350	10	800	353	5560350303	5560350303	10.220,00
RSK-FTU-VERSION - WORKING PRESSURE 6 BAR – BLUE EPOXY-COATING						
400*	10	900	290	5561400323	5561400323	14.720,00
500	10	1100	424	5561500903	5561500903	26.670,00
600	10	1300	534	5561600903	5561600903	33.530,00
700	10	1500	744	5561700903	5561700903	on request
800	10	1700	1029	5561800903	5561800903	on requeat
900	10	please contact us				
RSK-FTUD-VERSION - WORKING PRESSURE 10 BAR – BLUE EPOXY-COATING						
100	10	300	45	5570100303	5570100303	3.565,00
125	10	350	58	5570125303	5570125303	3.945,00
150	10	400	71	5570150303	5570150303	3.960,00
200	10	500	133	5570200303	5570200303	5.770,00
250	10	600	197	5570250303	5570250303	8.995,00
300	10	700	292	5570300303	5570300303	10.640,00
350	10	800	364	5570350303	5570350303	12.330,00
RSK-FTUD-VERSION - WORKING PRESSURE 6 BAR – BLUE EPOXY-COATING						
400*	10	900	303	5571400323	5571400323	16.020,00
500	10	1100	435	5571500903	5571500903	27.595,00
600	10	1300	545	5571600903	5571600903	33.395,00
700	10	1500	755	5571700903	5571700903	45.850,00
800	10	1700	1040	5571800903	5571800903	on request

* = body and bonnet in cast iron

- Display of the exact opening degree:
- Green Display: RSK open
- Red Display: RSK closed
- Can be used in the control room by display and/ or recording
- In the control room, an alarm signal can be programmed in the event of a fault
- Possibly necessary maintenance can be detected

ACCESSORIES

PRODUCT	WEIGHT(KG)	MAT.-NR.	TALIS-CODE	PRICE (€)
Inclinometer for FT Version		4RS0311890	4RS0311890	670,00
Display for Inclinometer		4RS0312890	4RS0312890	590,00

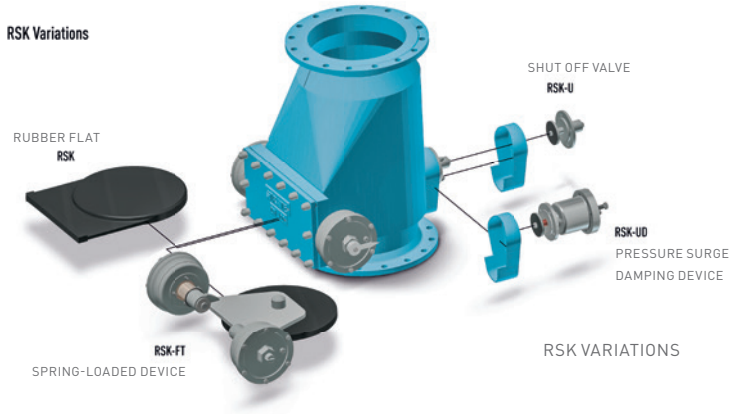

RSK VARIATIONS

STRATE
pump it up!
AWALIFT 80
STRATE
www.strate.com

SEWAGE PUMPING STATIONS

SERIES **AWALIFT 80**

AWALIFT 80

STRATE RANGE

FOR BUILDING TECHNOLOGY

- Plant capacity: 0.26 m3/h - 12 p.e.
- Pumping Head: up to 30 mWS
- Free ball passage: 80 mm
- Container dimensions (L x W x H): L = 870 mm, W = 420 mm, H = 190 mm
- Container capacity: 32 l
- Weight: 42 kg (including 0.75 kW motor)

Scope of delivery

- PUR container with integrated separator system
- PUR centrifugal pump and motor according to type map and operating point
- PUR swing check valve AWASTOP
- DN 80 / 100 with connecting flange DN 80 / DN 100 for the pressure line (no adapter required)
- Level measurement
- Pump control AWAmaster 1

TYPE	ENGINE	IP	PERFOR-MANCE QP [M3/H] / HMAX [M]	MAT.-NR.	TALIS-CODE	PRICE (€)
WITH LEVEL MEASUREMENT SR						
AWALIFT 80-SR	0,75 kW – 1500	67	14 m3/h / 4,5 m	50AAA10030	50AAA10030	2.905,00
AWALIFT 80-SR	1,5 kW – 3000	67	14 m3/h / 12 m	50AAC10030	50AAC10030	3.010,00
AWALIFT 80-SR	2,2 kW – 3000	67	14 m3/h / 19 m	50AAD10030	50AAD10030	3.125,00
AWALIFT 80-SR	3,0 kW – 3000	67	14 m3/h / 26 m	50AAE10030	50AAE10030	3.620,00
WITH LEVEL MEASUREMENT AS						
AWALIFT 80-AS	0,75 kW – 1500	67	14 m3/h / 4,5 m	50AAA10040	50AAA10040	3.505,00
AWALIFT 80-AS	1,5 kW – 3000	67	14 m3/h / 12 m	50AAC10040	50AAC10040	3.640,00
AWALIFT 80-AS	2,2 kW – 3000	67	14 m3/h / 19 m	50AAD10040	50AAD10040	3.805,00
AWALIFT 80-AS	3,0 kW – 3000	67	14 m3/h / 26 m	50AAE10040	50AAE10040	4.350,00

STRATE AWALIFT 80 is preferably used for the drainage of detached and semi-detached houses if the drainage pipe is below the backflow level (according to DIN 1986-100) and the houses cannot be drained via a natural gradient.

SERIES **AWALIFT 100**

AWALIFT 100

FOR BUILDING TECHNOLOGY

STRATE RANGE

- Plant capacity: 0.4 m3/h - 20 p.e.
- Pumping Head: up to 16 mWS
- Free ball passage: 100 mm
- Container dimensions (L x W x H): L = 800 mm, W = 420 mm, H = 200 mm
- Container capacity: 45 l
- Weight: about 78 kg

Scope of delivery

- Container with integrated separator system
- One centrifugal pump and motor according to type map and duty point
- One non-return valve AWASTOP DN 100 K
- Level measurement
- Pump control AWAmaster 1

Options

- Level measurement: MBAS-BN available, please contact us
- Shaft installation possible

TYPE	ENGINE	IP	PERFOR-MANCE QP [M3/H] / HMAX [M]	MAT.-NR.	TALIS-CODE	PRICE (€)
WITH LEVEL MEASUREMENT SR						
AWALIFT 100 U	0,75 kW – 1500	67	20 m3/h / 5,5 m	5000100030	5000100030	5.615,00
AWALIFT 100 U	1,5 kW – DC	55	20 m3/h / 5,5 m	5001900030	5001900030	5.730,00
AWALIFT 100 U	1,5 kW – 3000	67	20 m3/h / 10 m	50002B0030	50002B0030	6.040,00
AWALIFT 100 U	1,5 kW – 3000	67	20 m3/h / 12,5 m	50002C0030	50002C0030	6.040,00
AWALIFT 100 U	2,2 kW – 3000	67	20 m3/h / 12,5 m	50003C0030	50003C0030	6.180,00
AWALIFT 100 U	2,2 kW – 3000	67	20 m3/h / 14 m	50003D0030	50003D0030	6.180,00
AWALIFT 100 U	2,2 kW – 3000	67	20 m3/h / 16 m	50003E0030	50003E0030	6.180,00
WITH LEVEL MEASUREMENT AS						
AWALIFT 100 U	0,75 kW – 1500	67	20 m3/h / 5,5 m	5000100040	5000100040	6.275,00
AWALIFT 100 U	1,5 kW – DC	55	20 m3/h / 5,5 m	5001900040	5001900040	6.380,00
AWALIFT 100 U	1,5 kW – 3000	67	20 m3/h / 10 m	50002B0040	50002B0040	6.695,00
AWALIFT 100 U	1,5 kW – 3000	67	20 m3/h / 12,5 m	50002C0040	50002C0040	6.695,00
AWALIFT 100 U	2,2 kW – 3000	67	20 m3/h / 12,5 m	50003C0040	50003C0040	6.830,00
AWALIFT 100 U	2,2 kW – 3000	67	20 m3/h / 14 m	50003D0040	50003D0040	6.830,00
AWALIFT 100 U	2,2 kW – 3000	67	20 m3/h / 16 m	50003E0040	50003E0040	6.830,00

STRATE AWALIFT 100 is preferably used for the drainage of floors, houses and properties below the backwater level according to DIN 1986-100, i.e. for objects that cannot be drained via a natural gradient. DIN EN 12056-4 specifies the upper edge of the road at the connection to the public sewer system as the backflow level.

SEWAGE PUMPING STATIONS

SERIES **AWALIFT 74/1**

- Plant capacity: 1.0 m3/h - 50 p.e.
- Pumping Head: up to 22 mWS
- Free ball passage: 100 mm
- Container dimensions (L x W x H): L = 860 mm, W = 500 mm, H = 380 mm
- Container capacity: 80 l
- Weight: about 110 kg

Scope of delivery

- Container with integrated separator system
- One centrifugal pump and motor according to type map and duty point
- One non-return valve AWASTOP DN 100 K
- Level measurement
- Pump control AWAmaster 1

Options

- Level measurement: MBAS-BN available, please contact us
- Shaft installation possible

AWALIFT 74/1

FOR BUILDING TECHNOLOGY

STRATE RANGE

TYPE	ENGINE	IP	PERFOR-MANCE QP [M3/H] / HMAX [M]	MAT.-NR.	TALIS-CODE	PRICE (€)
PRICE FOR INLET CONNECTION DN 125 WITH LEVEL MEASUREMENT: SR						
AWALIFT 74/1	0,75 kW – 1500	67	20 m3/h / 5,5 m	5010100030	5010100030	6.720,00
AWALIFT 74/1	1,5 kW – 3000	67	20 m3/h / 11 m	50102B0030	50102B0030	7.130,00
AWALIFT 74/1	1,5 kW – 3000	67	20 m3/h / 12,5 m	50102C0030	50102C0030	7.130,00
AWALIFT 74/1	2,2 kW – 3000	67	20 m3/h / 12,5 m	50103C0030	50103C0030	7.245,00
AWALIFT 74/1	2,2 kW – 3000	67	20 m3/h / 14 m	50103D0030	50103D0030	7.245,00
AWALIFT 74/1	2,2 kW – 3000	67	20 m3/h / 16 m	50103E0030	50103E0030	7.245,00
AWALIFT 74/1	3 kW – 3000	67	20 m3/h / 14 m	50104D0030	50104D0030	7.655,00
AWALIFT 74/1	3 kW – 3000	67	20 m3/h / 16 m	50104E0030	50104E0030	7.655,00
AWALIFT 74/1	3 kW – 3000	67	20 m3/h / 18,5 m	50104F0030	50104F0030	7.655,00
AWALIFT 74/1	3 kW – 3000	67	20 m3/h / 20 m	50104G0030	50104G0030	7.655,00
AWALIFT 74/1	3 kW – 3000	67	20 m3/h / 22 m	50104H0030	50104H0030	7.655,00
PRICE FOR INLET CONNECTION DN 125 WITH LEVEL MEASUREMENT: AS						
AWALIFT 74/1	0,75 kW – 1500	67	20 m3/h / 5,5 m	5010100040	5010100040	7.410,00
AWALIFT 74/1	1,5 kW – 3000	67	20 m3/h / 11 m	50102B0040	50102B0040	7.770,00
AWALIFT 74/1	1,5 kW – 3000	67	20 m3/h / 12,5 m	50102C0040	50102C0040	7.770,00
AWALIFT 74/1	2,2 kW – 3000	67	20 m3/h / 12,5 m	50103C0040	50103C0040	7.890,00
AWALIFT 74/1	2,2 kW – 3000	67	20 m3/h / 14 m	50103D0040	50103D0040	7.890,00
AWALIFT 74/1	2,2 kW – 3000	67	20 m3/h / 16 m	50103E0040	50103E0040	7.890,00
AWALIFT 74/1	3 kW – 3000	67	20 m3/h / 14 m	50104D0040	50104D0040	8.325,00
AWALIFT 74/1	3 kW – 3000	67	20 m3/h / 16 m	50104E0040	50104E0040	8.325,00
AWALIFT 74/1	3 kW – 3000	67	20 m3/h / 18,5 m	50104F0040	50104F0040	8.325,00
AWALIFT 74/1	3 kW – 3000	67	20 m3/h / 20 m	50104G0040	50104G0040	8.325,00
AWALIFT 74/1	3 kW – 3000	67	20 m3/h / 22 m	50104H0040	50104H0040	8.325,00

- Objects that cannot be drained with natural slope
- As protection against backflow damage
- Scope of application:
  - Two-family houses

AWALIFT 74/1 FOR BUILDING TECHNOLOGY

TYPE	ENGINE	IP	PERFOR-MANCE QP [M3/H] / HMAX [M]	MAT.-NR.	TALIS-CODE	PRICE (€)
PRICE FOR INLET CONNECTION DN 150 MIT NIVEAUMESSUNG: SR						
AWALIFT 74/1	0,75 kW – 1500	67	20 m3/h / 5,5 m	5010100130	5010100130	7.130,00
AWALIFT 74/1	1,5 kW – 3000	67	20 m3/h / 11 m	50102B0130	50102B0130	7.540,00
AWALIFT 74/1	1,5 kW – 3000	67	20 m3/h / 12,5 m	50102C0130	50102C0130	7.540,00
AWALIFT 74/1	2,2 kW – 3000	67	20 m3/h / 12,5 m	50103C0130	50103C0130	7.655,00
AWALIFT 74/1	2,2 kW – 3000	67	20 m3/h / 14 m	50103D0130	50103D0130	7.655,00
AWALIFT 74/1	2,2 kW – 3000	67	20 m3/h / 16 m	50103E0130	50103E0130	7.655,00
AWALIFT 74/1	3 kW – 3000	67	20 m3/h / 14 m	50104D0130	50104D0130	8.065,00
AWALIFT 74/1	3 kW – 3000	67	20 m3/h / 16 m	50104E0130	50104E0130	8.065,00
AWALIFT 74/1	3 kW – 3000	67	20 m3/h / 18,5 m	50104F0130	50104F0130	8.065,00
AWALIFT 74/1	3 kW – 3000	67	20 m3/h / 20 m	50104G0130	50104G0130	8.065,00
AWALIFT 74/1	3 kW – 3000	67	20 m3/h / 22 m	50104H0130	50104H0130	8.065,00
PRICE FOR INLET CONNECTION DN 150 WITH LEVEL MEASUREMENT: AS						
AWALIFT 74/1	0,75 kW – 1500	67	20 m3/h / 5,5 m	5010100140	5010100140	7.770,00
AWALIFT 74/1	1,5 kW – 3000	67	20 m3/h / 11 m	50102B0140	50102B0140	8.170,00
AWALIFT 74/1	1,5 kW – 3000	67	20 m3/h / 12,5 m	50102C0140	50102C0140	8.170,00
AWALIFT 74/1	2,2 kW – 3000	67	20 m3/h / 12,5 m	50103C0140	50103C0140	8.305,00
AWALIFT 74/1	2,2 kW – 3000	67	20 m3/h / 14 m	50103D0140	50103D0140	8.305,00
AWALIFT 74/1	2,2 kW – 3000	67	20 m3/h / 16 m	50103E0140	50103E0140	8.305,00
AWALIFT 74/1	3 kW – 3000	67	20 m3/h / 14 m	50104D0140	50104D0140	8.705,00
AWALIFT 74/1	3 kW – 3000	67	20 m3/h / 16 m	50104E0140	50104E0140	8.705,00
AWALIFT 74/1	3 kW – 3000	67	20 m3/h / 18,5 m	50104F0140	50104F0140	8.705,00
AWALIFT 74/1	3 kW – 3000	67	20 m3/h / 20 m	50104G0140	50104G0140	8.705,00
AWALIFT 74/1	3 kW – 3000	67	20 m3/h / 22 m	50104H0140	50104H0140	8.705,00

SEWAGE PUMPING STATIONS

AWALIFT 74/1 FOR BUILDING TECHNOLOGY

TYPE	ENGINE	IP	PERFOR-MANCE QP [M3/H] / HMAX [M]	MAT.-NR.	TALIS-CODE	PRICE (€)
PRICE FOR INLET CONNECTION DN 200 WITH LEVEL MEASUREMENT: SR						
AWALIFT 74/1	0,75 kW – 1500	67	20 m3/h / 5,5 m	5010100230	5010100230	7.225,00
AWALIFT 74/1	1,5 kW – 3000	67	20 m3/h / 11 m	50102B0230	50102B0230	7.615,00
AWALIFT 74/1	1,5 kW – 3000	67	20 m3/h / 12,5 m	50102C0230	50102C0230	7.615,00
AWALIFT 74/1	2,2 kW – 3000	67	20 m3/h / 12,5 m	50103C0230	50103C0230	7.685,00
AWALIFT 74/1	2,2 kW – 3000	67	20 m3/h / 14 m	50103D0230	50103D0230	7.685,00
AWALIFT 74/1	2,2 kW – 3000	67	20 m3/h / 16 m	50103E0230	50103E0230	7.685,00
AWALIFT 74/1	3 kW – 3000	67	20 m3/h / 14 m	50104D0230	50104D0230	8.100,00
AWALIFT 74/1	3 kW – 3000	67	20 m3/h / 16 m	50104E0230	50104E0230	8.100,00
AWALIFT 74/1	3 kW – 3000	67	20 m3/h / 18,5 m	50104F0230	50104F0230	8.100,00
AWALIFT 74/1	3 kW – 3000	67	20 m3/h / 20 m	50104G0230	50104G0230	8.100,00
AWALIFT 74/1	3 kW – 3000	67	20 m3/h / 22 m	50104H0230	50104H0230	8.100,00
PRICE FOR INLET CONNECTION DN 200 WITH LEVEL MEASUREMENT: AS						
AWALIFT 74/1	0,75 kW – 1500	67	20 m3/h / 5,5 m	5010100240	5010100240	7.870,00
AWALIFT 74/1	1,5 kW – 3000	67	20 m3/h / 11 m	50102B0240	50102B0240	8.265,00
AWALIFT 74/1	1,5 kW – 3000	67	20 m3/h / 12,5 m	50102C0240	50102C0240	8.265,00
AWALIFT 74/1	2,2 kW – 3000	67	20 m3/h / 12,5 m	50103C0240	50103C0240	8.395,00
AWALIFT 74/1	2,2 kW – 3000	67	20 m3/h / 14 m	50103D0240	50103D0240	8.395,00
AWALIFT 74/1	2,2 kW – 3000	67	20 m3/h / 16 m	50103E0240	50103E0240	8.395,00
AWALIFT 74/1	3 kW – 3000	67	20 m3/h / 14 m	50104D0240	50104D0240	8.800,00
AWALIFT 74/1	3 kW – 3000	67	20 m3/h / 16 m	50104E0240	50104E0240	8.800,00
AWALIFT 74/1	3 kW – 3000	67	20 m3/h / 18,5 m	50104F0240	50104F0240	8.800,00
AWALIFT 74/1	3 kW – 3000	67	20 m3/h / 20 m	50104G0240	50104G0240	8.800,00
AWALIFT 74/1	3 kW – 3000	67	20 m3/h / 22 m	50104H0240	50104H0240	8.800,00

SERIES **AWALIFT 0/1**

- Plant capacity: 3.0 m3/h - 150 p.e.
- Pumping Head: up to 32 mWS
- Free ball passage: 100 mm
- Container dimensions (L x W x H): L = 950 mm, W = 500 mm, H = 525 mm
- Container capacity: 112 l
- Weight: about 190 kg

Scope of delivery

- Container with integrated separator system
- One centrifugal pump and motor according to type map and duty point
- One non-return valve AWASTOP DN 100 K
- Level measurement
- Pump control AWAmaster 1

Options

- Level measurement: MBAS-BN available, please contact us
- Shaft installation possible

AWALIFT 0/1

FOR BUILDING TECHNOLOGY

STRATE RANGE

TYPE	ENGINE	IP	PERFOR-MANCE QP [M3/H] / HMAX [M]	MAT.-NR.	TALIS-CODE	PRICE (€)
PRICE FOR INLET CONNECTION DN 125 WITH LEVEL MEASUREMENT: SR						
AWALIFT 0/1	0,75 kW – 1500	67	20 m3/h / 5,5 m	5020100030	5020100030	8.305,00
AWALIFT 0/1	1,5 kW – 1500	67	20 m3/h / 9 m	5020200030	5020200030	9.055,00
AWALIFT 0/1	2,2 kW – 1500	67	20 m3/h / 13 m	5020300030	5020300030	9.140,00
AWALIFT 0/1	3 kW – 3000	67	20 m3/h / 17 m	5020400030	5020400030	9.460,00
AWALIFT 0/1	4 kW – 3000	55	20 m3/h / 22,5 m	50214B0030	50214B0030	9.695,00
AWALIFT 0/1	4 kW – 3000	55	20 m3/h / 24,5 m	50214A0030	50214A0030	9.695,00
AWALIFT 0/1	5,5 kW – 3000	55	20 m3/h / 24 m	50205Q0030	50205Q0030	10.220,00
AWALIFT 0/1	5,5 kW – 3000	55	20 m3/h / 26,5 m	50205P0030	50205P0030	10.220,00
AWALIFT 0/1	5,5 kW – 3000	55	20 m3/h / 27 m	50205O0030	50205O0030	10.220,00
AWALIFT 0/1	5,5 kW – 3000	55	20 m3/h / 29,5 m	50205N0030	50205N0030	10.220,00
AWALIFT 0/1	5,5 kW – 3000	55	20 m3/h / 32 m	50205M0030	50205M0030	10.220,00
AWALIFT 0/1	5,5 kW – 3000	55	20 m3/h / 33 m	50205L0030	50205L0030	10.220,00
PRICE FOR INLET CONNECTION DN 125 WITH LEVEL MEASUREMENT: AS						
AWALIFT 0/1	0,75 kW – 1500	67	20 m3/h / 5,5 m	5020100040	5020100040	8.935,00
AWALIFT 0/1	1,5 kW – 1500	67	20 m3/h / 9 m	5020200040	5020200040	9.645,00
AWALIFT 0/1	2,2 kW – 1500	67	20 m3/h / 13 m	5020300040	5020300040	9.725,00
AWALIFT 0/1	3 kW – 3000	67	20 m3/h / 17 m	5020400040	5020400040	10.105,00
AWALIFT 0/1	4 kW – 3000	55	20 m3/h / 22,5 m	50214B0040	50214B0040	10.335,00
AWALIFT 0/1	4 kW – 3000	55	20 m3/h / 24,5 m	50214A0040	50214A0040	10.335,00
AWALIFT 0/1	5,5 kW – 3000	55	20 m3/h / 24 m	50205Q0140	50205Q0140	10.870,00
AWALIFT 0/1	5,5 kW – 3000	55	20 m3/h / 26,5 m	50205P0040	50205P0040	10.870,00
AWALIFT 0/1	5,5 kW – 3000	55	20 m3/h / 27 m	50205O0040	50205O0040	10.870,00
AWALIFT 0/1	5,5 kW – 3000	55	20 m3/h / 29,5 m	50205N0040	50205N0040	10.870,00
AWALIFT 0/1	5,5 kW – 3000	55	20 m3/h / 32 m	50205M0040	50205M0040	10.870,00
AWALIFT 0/1	5,5 kW – 3000	55	20 m3/h / 33 m	50205L0040	50205L0040	10.870,00

SEWAGE PUMPING STATIONS

AWALIFT 0/1 FOR BUILDING TECHNOLOGY

TYP	MOTOR	IP	ANLAGEN-LEISTUNG QP [M3/H] / HMAX [M]	MAT.-NR.	TALIS-CODE	PREIS (€)
PRICE FOR INLET CONNECTION DN 150 WITH LEVEL MEASUREMENT: SR						
AWALIFT 0/1	0,75 kW – 1500	67	20 m3/h / 5,5 m	5020100130	5020100130	8.695,00
AWALIFT 0/1	1,5 kW – 1500	67	20 m3/h / 9 m	5020200130	5020200130	9.450,00
AWALIFT 0/1	2,2 kW – 1500	67	20 m3/h / 13 m	5020300130	5020300130	9.540,00
AWALIFT 0/1	3 kW – 3000	67	20 m3/h / 17 m	5020400130	5020400130	9.860,00
AWALIFT 0/1	4 kW – 3000	55	20 m3/h / 22,5 m	50214B0130	50214B0130	10.095,00
AWALIFT 0/1	4 kW – 3000	55	20 m3/h / 24,5 m	50214A0130	50214A0130	10.095,00
AWALIFT 0/1	5,5 kW – 3000	55	20 m3/h / 24 m	50205Q0130	50205Q0130	10.220,00
AWALIFT 0/1	5,5 kW – 3000	55	20 m3/h / 26,5 m	50205P0130	50205P0130	10.220,00
AWALIFT 0/1	5,5 kW – 3000	55	20 m3/h / 27 m	50205O0130	50205O0130	10.220,00
AWALIFT 0/1	5,5 kW – 3000	55	20 m3/h / 29,5 m	50205N0130	50205N0130	10.220,00
AWALIFT 0/1	5,5 kW – 3000	55	20 m3/h / 32 m	50205M0130	50205M0130	10.220,00
AWALIFT 0/1	5,5 kW – 3000	55	20 m3/h / 33 m	50205L0130	50205L0130	10.220,00
PRICE FOR INLET CONNECTION DN 150 WITH LEVEL MEASUREMENT: AS						
AWALIFT 0/1	0,75 kW – 1500	67	20 m3/h / 5,5 m	5020100140	5020100140	9.335,00
AWALIFT 0/1	1,5 kW – 1500	67	20 m3/h / 9 m	5020200140	5020200140	10.095,00
AWALIFT 0/1	2,2 kW – 1500	67	20 m3/h / 13 m	5020300140	5020300140	10.190,00
AWALIFT 0/1	3 kW – 3000	67	20 m3/h / 17 m	5020400140	5020400140	10.520,00
AWALIFT 0/1	4 kW – 3000	55	20 m3/h / 22,5 m	50214B0140	50214B0140	10.745,00
AWALIFT 0/1	4 kW – 3000	55	20 m3/h / 24,5 m	50214A0140	50214A0140	10.745,00
AWALIFT 0/1	5,5 kW – 3000	55	20 m3/h / 24 m	50205Q0040	50205Q0040	10.870,00
AWALIFT 0/1	5,5 kW – 3000	55	20 m3/h / 26,5 m	50205P0140	50205P0140	10.870,00
AWALIFT 0/1	5,5 kW – 3000	55	20 m3/h / 27 m	50205O0140	50205O0140	10.870,00
AWALIFT 0/1	5,5 kW – 3000	55	20 m3/h / 29,5 m	50205N0140	50205N0140	10.870,00
AWALIFT 0/1	5,5 kW – 3000	55	20 m3/h / 32 m	50205M0140	50205M0140	10.870,00
AWALIFT 0/1	5,5 kW – 3000	55	20 m3/h / 33 m	50205L0140	50205L0140	10.870,00
PRICE FOR INLET CONNECTION DN 200 WITH LEVEL MEASUREMENT: SR						
AWALIFT 0/1	0,75 kW – 1500	67	20 m3/h / 5,5 m	5020100230	5020100230	8.790,00
AWALIFT 0/1	1,5 kW – 1500	67	20 m3/h / 9 m	5020200230	5020200230	9.550,00

AWALIFT 0/1 FOR BUILDING TECHNOLOGY

TYPE	ENGINE	IP	PERFOR-MANCE QP [M3/H] / HMAX [M]	MAT.-NR.	TALIS-CODE	PRICE (€)
AWALIFT 0/1	2,2 kW – 1500	67	20 m3/h / 13 m	5020300230	5020300230	9.635,00
AWALIFT 0/1	3 kW – 3000	67	20 m3/h / 17 m	5020400230	5020400230	9.965,00
AWALIFT 0/1	4 kW – 3000	55	20 m3/h / 22,5 m	50214B0230	50214B0230	10.190,00
AWALIFT 0/1	4 kW – 3000	55	20 m3/h / 24,5 m	50214A0230	50214A0230	10.190,00
AWALIFT 0/1	5,5 kW – 3000	55	20 m3/h / 24 m	50205Q0230	50205Q0230	10.715,00
AWALIFT 0/1	5,5 kW – 3000	55	20 m3/h / 26,5 m	50205P0230	50205P0230	10.715,00
AWALIFT 0/1	5,5 kW – 3000	55	20 m3/h / 27 m	50205O0230	50205O0230	10.715,00
AWALIFT 0/1	5,5 kW – 3000	55	20 m3/h / 29,5 m	50205N0230	50205N0230	10.715,00
AWALIFT 0/1	5,5 kW – 3000	55	20 m3/h / 32 m	50205M0230	50205M0230	10.715,00
AWALIFT 0/1	5,5 kW – 3000	55	20 m3/h / 33 m	50205L0230	50205L0230	10.715,00
PRICE FOR INLET CONNECTION DN 200 WITH LEVEL MEASUREMENT: AS						
AWALIFT 0/1	0,75 kW – 1500	67	20 m3/h / 5,5 m	5020100240	5020100240	9.425,00
AWALIFT 0/1	1,5 kW – 1500	67	20 m3/h / 9 m	5020200240	5020200240	10.190,00
AWALIFT 0/1	2,2 kW – 1500	67	20 m3/h / 13 m	5020300240	5020300240	10.280,00
AWALIFT 0/1	3 kW – 3000	67	20 m3/h / 17 m	5020400240	5020400240	10.610,00
AWALIFT 0/1	4 kW – 3000	55	20 m3/h / 22,5 m	50214B0240	50214B0240	10.850,00
AWALIFT 0/1	4 kW – 3000	55	20 m3/h / 24,5 m	50214A0240	50214A0240	10.850,00
AWALIFT 0/1	5,5 kW – 3000	55	20 m3/h / 24 m	50205Q0240	50205Q0240	11.385,00
AWALIFT 0/1	5,5 kW – 3000	55	20 m3/h / 26,5 m	50205P0240	50205P0240	11.385,00
AWALIFT 0/1	5,5 kW – 3000	55	20 m3/h / 27 m	50205O0240	50205O0240	11.385,00
AWALIFT 0/1	5,5 kW – 3000	55	20 m3/h / 29,5 m	50205N0240	50205N0240	11.385,00
AWALIFT 0/1	5,5 kW – 3000	55	20 m3/h / 32 m	50205M0240	50205M0240	11.385,00
AWALIFT 0/1	5,5 kW – 3000	55	20 m3/h / 33 m	50205L0240	50205L0240	11.385,00

Scope of application:
- Apartment buildings
- Objects that cannot be drained with natural slope

SEWAGE PUMPING STATIONS

SERIES **AWALIFT 74/2**

- Plant capacity: 4 m3/h - 200 p.e.
- Pumping Head: up to 22 mWS
- Free ball passage: 100 mm
- Container dimensions (L x W x H): L = 860 mm, W = 660 mm, H = 380 mm
- Container contents: 107 l
- Weight: about 175 kg

Scope of delivery

- A container with two seperator systems
- Two centrifugal pumps and motors according to type map and duty point
- Two non-return valves AWASTOP DN 100 K
- Two pressure pipe gate valves DN 100
- Level measurement

Options

- Level measurement: MBAS-BN available, please contact us
- Shaft installation possible

AWALIFT 74/2

STRATE RANGE

FOR PUBLIC BUILDINGS AND MUNICIPAL APPLICATIONS

TYPE	ENGINE	IP	PERFOR-MANCE QP [M3/H] / HMAX [M]	MAT.-NR.	TALIS-CODE	PRICE (€)
PRICE FOR INLET CONNECTION DN 125 WITH LEVEL MEASUREMENT: SR						
AWALIFT 74/2	0,75 kW – 1500	67	20 m3/h / 5,5 m	5130100030	5130100030	10.715,00
AWALIFT 74/2	1,5 kW – 3000	67	20 m3/h / 11 m	51302B0030	51302B0030	11.805,00
AWALIFT 74/2	1,5 kW – 3000	67	20 m3/h / 12,5 m	51302C0030	51302C0030	11.805,00
AWALIFT 74/2	2,2 kW – 3000	67	20 m3/h / 12,5 m	51303C0030	51303C0030	12.970,00
AWALIFT 74/2	2,2 kW – 3000	67	20 m3/h / 14 m	51303D0030	51303D0030	12.970,00
AWALIFT 74/2	2,2 kW – 3000	67	20 m3/h / 16 m	51303E0030	51303E0030	12.970,00
AWALIFT 74/2	3 kW – 3000	67	20 m3/h / 14 m	51304D0030	51304D0030	13.670,00
AWALIFT 74/2	3 kW – 3000	67	20 m3/h / 16 m	51304E0030	51304E0030	13.670,00
AWALIFT 74/2	3 kW – 3000	67	20 m3/h / 18,5 m	51304F0030	51304F0030	13.670,00
AWALIFT 74/2	3 kW – 3000	67	20 m3/h / 20 m	51304G0030	51304G0030	13.670,00
AWALIFT 74/2	3 kW – 3000	67	20 m3/h / 22 m	51304H0030	51304H0030	13.670,00
PRICE FOR INLET CONNECTION DN 125 WITH LEVEL MEASUREMENT: AS						
AWALIFT 74/2	0,75 kW – 1500	67	20 m3/h / 5,5 m	5130100040	5130100040	11.365,00
AWALIFT 74/2	1,5 kW – 3000	67	20 m3/h / 11 m	51302B0040	51302B0040	12.435,00
AWALIFT 74/2	1,5 kW – 3000	67	20 m3/h / 12,5 m	51302C0040	51302C0040	12.435,00
AWALIFT 74/2	2,2 kW – 3000	67	20 m3/h / 12,5 m	51303C0040	51303C0040	13.670,00
AWALIFT 74/2	2,2 kW – 3000	67	20 m3/h / 14 m	51303D0040	51303D0040	13.670,00
AWALIFT 74/2	2,2 kW – 3000	67	20 m3/h / 16 m	51303E0040	51303E0040	13.670,00
AWALIFT 74/2	3 kW – 3000	67	20 m3/h / 14 m	51304D0040	51304D0040	14.370,00
AWALIFT 74/2	3 kW – 3000	67	20 m3/h / 16 m	51304E0040	51304E0040	14.370,00
AWALIFT 74/2	3 kW – 3000	67	20 m3/h / 18,5 m	51304F0040	51304F0040	14.370,00
AWALIFT 74/2	3 kW – 3000	67	20 m3/h / 20 m	51304G0040	51304G0040	14.370,00
AWALIFT 74/2	3 kW – 3000	67	20 m3/h / 22 m	51304H0040	51304H0040	14.370,00

AWALIFT 74/2 FOR PUBLIC BUILDINGS AND MUNICIPAL APPLICATIONS

Scope of application:
- Apartment buildings
- Where the reserve pump ensures fail-safe operation e.g. in restaurants and public places, and in the buildings
- Objects that cannot be drained with natural slope
- As protection against backflow damage
- Infrastructure objects, like airports, industrial parks, Subway networks etc.

TYPE	ENGINE	IP	PERFOR-MANCE QP [M3/H] / HMAX [M]	MAT.-NR.	TALIS-CODE	PRICE (€)
PRICE FOR INLET CONNECTION DN 150 WITH LEVEL MEASUREMENT: SR						
AWALIFT 74/2	0,75 kW – 1500	67	20 m3/h / 5,5 m	5130100130	5130100130	11.115,00
AWALIFT 74/2	1,5 kW – 3000	67	20 m3/h / 11 m	51302B0130	51302B0130	12.240,00
AWALIFT 74/2	1,5 kW – 3000	67	20 m3/h / 12,5 m	51302C0130	51302C0130	12.240,00
AWALIFT 74/2	2,2 kW – 3000	67	20 m3/h / 12,5 m	51303C0130	51303C0130	13.415,00
AWALIFT 74/2	2,2 kW – 3000	67	20 m3/h / 14 m	51303D0130	51303D0130	13.415,00
AWALIFT 74/2	2,2 kW – 3000	67	20 m3/h / 16 m	51303E0130	51303E0130	13.415,00
AWALIFT 74/2	3 kW – 3000	67	20 m3/h / 14 m	51304D0130	51304D0130	14.105,00
AWALIFT 74/2	3 kW – 3000	67	20 m3/h / 16 m	51304E0130	51304E0130	14.105,00
AWALIFT 74/2	3 kW – 3000	67	20 m3/h / 18,5 m	51304F0130	51304F0130	14.105,00
AWALIFT 74/2	3 kW – 3000	67	20 m3/h / 20 m	51304G0130	51304G0130	14.105,00
AWALIFT 74/2	3 kW – 3000	67	20 m3/h / 22 m	51304H0130	51304H0130	14.105,00
PRICE FOR INLET CONNECTION DN 150 WITH LEVEL MEASUREMENT: AS						
AWALIFT 74/2	0,75 kW – 1500	67	20 m3/h / 5,5 m	5130100140	5130100140	11.765,00
AWALIFT 74/2	1,5 kW – 3000	67	20 m3/h / 11 m	51302B0140	51302B0140	12.970,00
AWALIFT 74/2	1,5 kW – 3000	67	20 m3/h / 12,5 m	51302C0140	51302C0140	12.970,00
AWALIFT 74/2	2,2 kW – 3000	67	20 m3/h / 12,5 m	51303C0140	51303C0140	14.115,00
AWALIFT 74/2	2,2 kW – 3000	67	20 m3/h / 14 m	51303D0140	51303D0140	14.115,00
AWALIFT 74/2	2,2 kW – 3000	67	20 m3/h / 16 m	51303E0140	51303E0140	14.115,00
AWALIFT 74/2	3 kW – 3000	67	20 m3/h / 14 m	51304D0140	51304D0140	14.835,00
AWALIFT 74/2	3 kW – 3000	67	20 m3/h / 16 m	51304E0140	51304E0140	14.835,00
AWALIFT 74/2	3 kW – 3000	67	20 m3/h / 18,5 m	51304F0140	51304F0140	14.835,00
AWALIFT 74/2	3 kW – 3000	67	20 m3/h / 20 m	51304G0140	51304G0140	14.835,00
AWALIFT 74/2	3 kW – 3000	67	20 m3/h / 22 m	51304H0140	51304H0140	14.835,00

SEWAGE PUMPING STATIONS

AWALIFT 74/2 FOR PUBLIC BUILDINGS AND MUNICIPAL APPLICATIONS

TYPE	ENGINE	IP	PERFOR-MANCE QP [M3/H] / HMAX [M]	MAT.-NR.	TALIS-CODE	PRICE (€)
PRICE FOR INLET CONNECTION DN 200 WITH LEVEL MEASUREMENT: SR						
AWALIFT 74/2	0,75 kW – 1500	67	20 m3/h / 5,5 m	5130100230	5130100230	**11.220,00**
AWALIFT 74/2	1,5 kW – 3000	67	20 m3/h / 11 m	51302B0230	51302B0230	**12.320,00**
AWALIFT 74/2	1,5 kW – 3000	67	20 m3/h / 12,5 m	51302C0230	51302C0230	**12.320,00**
AWALIFT 74/2	2,2 kW – 3000	67	20 m3/h / 12,5 m	51303C0230	51303C0230	**13.525,00**
AWALIFT 74/2	2,2 kW – 3000	67	20 m3/h / 14 m	51303D0230	51303D0230	**13.525,00**
AWALIFT 74/2	2,2 kW – 3000	67	20 m3/h / 16 m	51303E0230	51303E0230	**13.525,00**
AWALIFT 74/2	3 kW – 3000	67	20 m3/h / 14 m	51304D0230	51304D0230	**14.165,00**
AWALIFT 74/2	3 kW – 3000	67	20 m3/h / 16 m	51304E0230	51304E0230	**14.165,00**
AWALIFT 74/2	3 kW – 3000	67	20 m3/h / 18,5 m	51304F0230	51304F0230	**14.165,00**
AWALIFT 74/2	3 kW – 3000	67	20 m3/h / 20 m	51304G0230	51304G0230	**14.165,00**
AWALIFT 74/2	3 kW – 3000	67	20 m3/h / 22 m	51304H0230	51304H0230	**14.165,00**
PRICE FOR INLET CONNECTION DN 200 WITH LEVEL MEASUREMENT: AS						
AWALIFT 74/2	0,75 kW – 1500	67	20 m3/h / 5,5 m	5130100240	5130100240	**11.860,00**
AWALIFT 74/2	1,5 kW – 3000	67	20 m3/h / 11 m	51302B0240	51302B0240	**13.065,00**
AWALIFT 74/2	1,5 kW – 3000	67	20 m3/h / 12,5 m	51302C0240	51302C0240	**13.065,00**
AWALIFT 74/2	2,2 kW – 3000	67	20 m3/h / 12,5 m	51303C0240	51303C0240	**14.215,00**
AWALIFT 74/2	2,2 kW – 3000	67	20 m3/h / 14 m	51303D0240	51303D0240	**14.215,00**
AWALIFT 74/2	2,2 kW – 3000	67	20 m3/h / 16 m	51303E0240	51303E0240	**14.215,00**
AWALIFT 74/2	3 kW – 3000	67	20 m3/h / 14 m	51304D0240	51304D0240	**14.925,00**
AWALIFT 74/2	3 kW – 3000	67	20 m3/h / 16 m	51304E0240	51304E0240	**14.925,00**
AWALIFT 74/2	3 kW – 3000	67	20 m3/h / 18,5 m	51304F0240	51304F0240	**14.925,00**
AWALIFT 74/2	3 kW – 3000	67	20 m3/h / 20 m	51304G0240	51304G0240	**14.925,00**
AWALIFT 74/2	3 kW – 3000	67	20 m3/h / 22 m	51304H0240	51304H0240	**14.925,00**

SERIES **AWALIFT 0/2**

- Plant capacity: 6 m3/h - 300 EW
- Pumping Head: up to 32 mWS
- Free ball passage: 100 mm
- Container dimensions (L x W x H): L = 1015 mm, W = 820 mm, H = 535 mm
- Container contents: 205 l
- Weight: about 320 kg

Scope of delivery

- A container with two seperator systems
- Two centrifugal pumps and motors according to type map and duty point
- Two non-return valves AWASTOP DN 100 K
- Two pressure pipe gate valves DN 100
- Level measurement

Options

- Level measurement: MBAS-BN available, please contact us
- Shaft installation possible

AWALIFT 0/2

STRATE RANGE

FOR PUBLIC BUILDINGS AND MUNICIPAL APPLICATIONS

TYPE	ENGINE	IP	PERFORMANCE QP [M3/H] / HMAX [M]	MAT.-NR.	TALIS-CODE	PRICE (€)
PRICE FOR INLET CONNECTION DN 125 WITH LEVEL MEASUREMENT: SR						
AWALIFT 0/2	0,75 kW – 1500	67	20 m3/h / 5,5 m	5140100030	5140100030	17.150,00
AWALIFT 0/2	1,5 kW – 1500	67	20 m3/h / 9 m	5140200030	5140200030	18.625,00
AWALIFT 0/2	2,2 kW – 1500	67	20 m3/h / 13 m	5140300030	5140300030	19.090,00
AWALIFT 0/2	3 kW – 3000	67	20 m3/h / 17 m	5140400030	5140400030	19.420,00
AWALIFT 0/2	4 kW – 3000	55	20 m3/h / 22,5 m	51414B0030	51414B0030	19.675,00
AWALIFT 0/2	4 kW – 3000	55	20 m3/h / 24,5 m	51414A0030	51414A0030	19.675,00
AWALIFT 0/2	5,5 kW – 3000	55	20 m3/h / 24 m	51405Q0030	51405Q0030	21.795,00
AWALIFT 0/2	5,5 kW – 3000	55	20 m3/h / 26,5 m	51405P0030	51405P0030	21.795,00
AWALIFT 0/2	5,5 kW – 3000	55	20 m3/h / 27 m	51405O0030	51405O0030	21.795,00
AWALIFT 0/2	5,5 kW – 3000	55	20 m3/h / 29,5 m	51405N0030	51405N0030	21.795,00
AWALIFT 0/2	5,5 kW – 3000	55	20 m3/h / 32 m	51405M0030	51405M0030	21.795,00
AWALIFT 0/2	5,5 kW – 3000	55	20 m3/h / 33 m	51405L0030	51405L0030	21.795,00
PRICE FOR INLET CONNECTION DN 125 WITH LEVEL MEASUREMENT: AS						
AWALIFT 0/2	0,75 kW – 1500	67	20 m3/h / 5,5 m	5140100040	5140100040	17.760,00
AWALIFT 0/2	1,5 kW – 1500	67	20 m3/h / 9 m	5140200040	5140200040	19.265,00
AWALIFT 0/2	2,2 kW – 1500	67	20 m3/h / 13 m	5140300040	5140300040	19.725,00
AWALIFT 0/2	3 kW – 3000	67	20 m3/h / 17 m	5140400040	5140400040	20.045,00
AWALIFT 0/2	4 kW – 3000	55	20 m3/h / 22,5 m	51414B0040	51414B0040	20.305,00
AWALIFT 0/2	4 kW – 3000	55	20 m3/h / 24,5 m	51414A0040	51414A0040	20.305,00
AWALIFT 0/2	5,5 kW – 3000	55	20 m3/h / 24 m	51405Q0040	51405Q0040	22.395,00
AWALIFT 0/2	5,5 kW – 3000	55	20 m3/h / 26,5 m	51405P0040	51405P0040	22.395,00
AWALIFT 0/2	5,5 kW – 3000	55	20 m3/h / 27 m	51405O0040	51405O0040	22.395,00
AWALIFT 0/2	5,5 kW – 3000	55	20 m3/h / 29,5 m	51405N0040	51405N0040	22.395,00
AWALIFT 0/2	5,5 kW – 3000	55	20 m3/h / 32 m	51405M0040	51405M0040	22.395,00
AWALIFT 0/2	5,5 kW – 3000	55	20 m3/h / 33 m	51405L0040	51405L0040	22.395,00

SEWAGE PUMPING STATIONS

Scope of application:

- Larger buildings, industrial companies, individual streets
- Where the standby pump must guarantee fail-safe operation, e.g. in restaurants and public buildings
- Objects that cannot be drained with natural slope
- As protection against backflow damage
- Infrastructure objects, such as airports, industrial parks, Subway networks etc.

AWALIFT 0/2 FOR PUBLIC BUILDINGS AND MUNICIPAL APPLICATIONS

TYPE	ENGINE	IP	PERFOR-MANCE QP [M3/H] / HMAX [M]	MAT.-NR.	TALIS-CODE	PRICE (€)
PRICE FOR INLET CONNECTION DN 150 WITH LEVEL MEASUREMENT: SR						
AWALIFT 0/2	0,75 kW – 1500	67	20 m3/h / 5,5 m	5140100130	5140100130	17.555,00
AWALIFT 0/2	1,5 kW – 1500	67	20 m3/h / 9 m	5140200130	5140200130	19.035,00
AWALIFT 0/2	2,2 kW – 1500	67	20 m3/h / 13 m	5140300130	5140300130	19.510,00
AWALIFT 0/2	3 kW – 3000	67	20 m3/h / 17 m	5140400130	5140400130	19.840,00
AWALIFT 0/2	4 kW – 3000	55	20 m3/h / 22,5 m	51414B0130	51414B0130	20.075,00
AWALIFT 0/2	4 kW – 3000	55	20 m3/h / 24,5 m	51414A0130	51414A0130	20.075,00
AWALIFT 0/2	5,5 kW – 3000	55	20 m3/h / 24 m	51405Q0130	51405Q0130	22.200,00
AWALIFT 0/2	5,5 kW – 3000	55	20 m3/h / 26,5 m	51405P0130	51405P0130	22.200,00
AWALIFT 0/2	5,5 kW – 3000	55	20 m3/h / 27 m	51405O0130	51405O0130	22.200,00
AWALIFT 0/2	5,5 kW – 3000	55	20 m3/h / 29,5 m	51405N0130	51405N0130	22.200,00
AWALIFT 0/2	5,5 kW – 3000	55	20 m3/h / 32 m	51405M0130	51405M0130	22.200,00
AWALIFT 0/2	5,5 kW – 3000	55	20 m3/h / 33 m	51405L0130	51405L0130	22.200,00
PRICE FOR INLET CONNECTION DN 150 WITH LEVEL MEASUREMENT: AS						
AWALIFT 0/2	0,75 kW – 1500	67	20 m3/h / 5,5 m	5140100140	5140100140	18.160,00
AWALIFT 0/2	1,5 kW – 1500	67	20 m3/h / 9 m	5140200140	5140200140	19.655,00
AWALIFT 0/2	2,2 kW – 1500	67	20 m3/h / 13 m	5140300140	5140300140	20.140,00
AWALIFT 0/2	3 kW – 3000	67	20 m3/h / 17 m	5140400140	5140400140	20.460,00
AWALIFT 0/2	4 kW – 3000	55	20 m3/h / 22,5 m	51414B0140	51414B0140	20.695,00
AWALIFT 0/2	4 kW – 3000	55	20 m3/h / 24,5 m	51414A0140	51414A0140	20.695,00
AWALIFT 0/2	5,5 kW – 3000	55	20 m3/h / 24 m	51405Q0140	51405Q0140	22.805,00
AWALIFT 0/2	5,5 kW – 3000	55	20 m3/h / 26,5 m	51405P0140	51405P0140	22.805,00
AWALIFT 0/2	5,5 kW – 3000	55	20 m3/h / 27 m	51405O0140	51405O0140	22.805,00
AWALIFT 0/2	5,5 kW – 3000	55	20 m3/h / 29,5 m	51405N0140	51405N0140	22.805,00
AWALIFT 0/2	5,5 kW – 3000	55	20 m3/h / 32 m	51405M0140	51405M0140	22.805,00
AWALIFT 0/2	5,5 kW – 3000	55	20 m3/h / 33 m	51405L0140	51405L0140	22.805,00

AWALIFT 0/2 FOR PUBLIC BUILDINGS AND MUNICIPAL APPLICATIONS

TYPE	ENGINE	IP	PERFOR-MANCE QP [M3/H] / HMAX [M]	MAT.-NR.	TALIS-CODE	PRICE (€)
PRICE FOR INLET CONNECTION DN 200 WITH LEVEL MEASUREMENT: SR						
AWALIFT 0/2	0,75 kW – 1500	67	20 m3/h / 5,5 m	5140100230	5140100230	**17.645,00**
AWALIFT 0/2	1,5 kW – 1500	67	20 m3/h / 9 m	5140200230	5140200230	**19.120,00**
AWALIFT 0/2	2,2 kW – 1500	67	20 m3/h / 13 m	5140300230	5140300230	**19.605,00**
AWALIFT 0/2	3 kW – 3000	67	20 m3/h / 17 m	5140400230	5140400230	**19.925,00**
AWALIFT 0/2	4 kW – 3000	55	20 m3/h / 22,5 m	51414B0230	51414B0230	**20.160,00**
AWALIFT 0/2	4 kW – 3000	55	20 m3/h / 24,5 m	51414A0230	51414A0230	**20.160,00**
AWALIFT 0/2	5,5 kW – 3000	55	20 m3/h / 24 m	51405Q0230	51405Q0230	**22.310,00**
AWALIFT 0/2	5,5 kW – 3000	55	20 m3/h / 26,5 m	51405P0230	51405P0230	**22.310,00**
AWALIFT 0/2	5,5 kW – 3000	55	20 m3/h / 27 m	51405O0230	51405O0230	**22.310,00**
AWALIFT 0/2	5,5 kW – 3000	55	20 m3/h / 29,5 m	51405N0230	51405N0230	**22.310,00**
AWALIFT 0/2	5,5 kW – 3000	55	20 m3/h / 32 m	51405M0230	51405M0230	**22.310,00**
AWALIFT 0/2	5,5 kW – 3000	55	20 m3/h / 33 m	51405L0230	51405L0230	**22.310,00**
PRICE FOR INLET CONNECTION DN 200 WITH LEVEL MEASUREMENT: AS						
AWALIFT 0/2	0,75 kW – 1500	67	20 m3/h / 5,5 m	5140100240	5140100240	**18.285,00**
AWALIFT 0/2	1,5 kW – 1500	67	20 m3/h / 9 m	5140200240	5140200240	**19.770,00**
AWALIFT 0/2	2,2 kW – 1500	67	20 m3/h / 13 m	5140300240	5140300240	**20.230,00**
AWALIFT 0/2	3 kW – 3000	67	20 m3/h / 17 m	5140400240	5140400240	**20.590,00**
AWALIFT 0/2	4 kW – 3000	55	20 m3/h / 22,5 m	51414B0240	51414B0240	**20.820,00**
AWALIFT 0/2	4 kW – 3000	55	20 m3/h / 24,5 m	51414A0240	51414A0240	**20.820,00**
AWALIFT 0/2	5,5 kW – 3000	55	20 m3/h / 24 m	51405Q0240	51405Q0240	**22.940,00**
AWALIFT 0/2	5,5 kW – 3000	55	20 m3/h / 26,5 m	51405P0240	51405P0240	**22.940,00**
AWALIFT 0/2	5,5 kW – 3000	55	20 m3/h / 27 m	51405O0240	51405O0240	**22.940,00**
AWALIFT 0/2	5,5 kW – 3000	55	20 m3/h / 29,5 m	51405N0240	51405N0240	**22.940,00**
AWALIFT 0/2	5,5 kW – 3000	55	20 m3/h / 32 m	51405M0240	51405M0240	**22.940,00**
AWALIFT 0/2	5,5 kW – 3000	55	20 m3/h / 33 m	51405L0240	51405L0240	**22.940,00**

SEWAGE PUMPING STATIONS

SERIES **AWALIFT 1/2**

- plant capacity: 15 m3/h - 750 P.E.
- Pumping head: up to 70 mWS
- Free ball passage: 100 mm
- Container dimensions (L x W x H): L = 1400 mm, W = 800 mm, H = 1000 mm
- Container capacity: 430 l
- Weight: about 520 kg

Scope of delivery

- A container with two seperator systems
- Two centrifugal pumps and motors according to type map and duty point
- Two non-return valves AWASTOP DN 100 K
- Y-branch pipe DN 100
- Two pressure pipe gate valves DN 100
- Level measurement

Options

- Level measurement: MBAS-BN available, please contact us
- Shaft installation possible

AWALIFT 1/2

STRATE RANGE

FOR PUBLIC BUILDINGS AND MUNICIPAL APPLICATIONS

TYPE	ENGINE	IP	PERFOR-MANCE QP [M3/H] / HMAX [M]	MAT.-NR.	TALIS-CODE	PRICE (€)
PRICE FOR AWALIFT WITH INLET FLANGE DN 150 LEFT; LEVEL MEASUREMENT: SR						
AWALIFT 1/2	1,5 kW – 1500	67	20 m3/h / 9 m	5150200030	5150200030	21.675,00
AWALIFT 1/2	2,2 kW – 1500	67	20 m3/h / 13 m	5150300030	5150300030	22.135,00
AWALIFT 1/2	3 kW – 1500	67	20 m3/h / 17 m	5150400030	5150400030	22.250,00
AWALIFT 1/2	3 kW – 3000	67	20 m3/h / 17 m	5150450030	5150450030	22.455,00
AWALIFT 1/2	4 kW – 3000	55	20 m3/h / 22,5 m	51514B0030	51514B0030	22.765,00
AWALIFT 1/2	4 kW – 3000	55	20 m3/h / 24,5 m	51514A0030	51514A0030	22.765,00
AWALIFT 1/2	5,5 kW – 3000	55	20 m3/h / 24 m	51505Q0030	51505Q0030	25.095,00
AWALIFT 1/2	5,5 kW – 3000	55	20 m3/h / 26,5 m	51505P0030	51505P0030	25.095,00
AWALIFT 1/2	5,5 kW – 3000	55	20 m3/h / 27 m	51505O0030	51505O0030	25.095,00
AWALIFT 1/2	5,5 kW – 3000	55	20 m3/h / 29,5 m	51505N0030	51505N0030	25.095,00
AWALIFT 1/2	5,5 kW – 3000	55	20 m3/h / 32 m	51505M0030	51505M0030	25.095,00
AWALIFT 1/2	5,5 kW – 3000	55	20 m3/h / 33 m	51505L0030	51505L0030	25.095,00
AWALIFT 1/2	7,5 kW – 3000	55	20 m3/h / 32 m	51510M0030	51510M0030	25.525,00
AWALIFT 1/2	7,5 kW – 3000	55	20 m3/h / 34 m	51510L0030	51510L0030	25.525,00
AWALIFT 1/2	7,5 kW – 3000	55	20 m3/h / 37 m	51510K0030	51510K0030	25.525,00
AWALIFT 1/2	7,5 kW – 3000	55	20 m3/h / 40 m	51510J0030	51510J0030	25.525,00
AWALIFT 1/2	7,5 kW – 3000	55	20 m3/h / 43 m	51510I0030	51510I0030	25.525,00
AWALIFT 1/2	11 kW – 3000	55	20 m3/h / < 60 m	please contact us		
PRICE FOR AWALIFT WITH INLET FLANGE DN 150 LEFT; LEVEL MEASUREMENT: AS						
AWALIFT 1/2	1,5 kW – 1500	67	20 m3/h / 9 m	5150200040	5150200040	22.310,00
AWALIFT 1/2	2,2 kW – 1500	67	20 m3/h / 13 m	5150300040	5150300040	22.785,00
AWALIFT 1/2	3 kW – 1500	67	20 m3/h / 17 m	5150400040	5150400040	22.890,00
AWALIFT 1/2	3 kW – 3000	67	20 m3/h / 17 m	5150450040	5150450040	23.105,00
AWALIFT 1/2	4 kW – 3000	55	20 m3/h / 22,5 m	51514B0040	51514B0040	23.395,00
AWALIFT 1/2	4 kW – 3000	55	20 m3/h / 24,5 m	51514A0040	51514A0040	23.395,00

AWALIFT 1/2 FOR PUBLIC BUILDINGS AND MUNICIPAL APPLICATIONS

Scope of application:
- Larger buildings, industrial plants, individual streets
- Objects that cannot be drained with natural slope
- As protection against backflow damage
- Infrastructure objects, like airports, industrial parks, Subway networks etc.

TYPE	ENGINE	IP	PERFOR-MANCE QP [M3/H] / HMAX [M]	MAT.-NR.	TALIS-CODE	PRICE (€)
AWALIFT 1/2	5,5 kW – 3000	55	20 m3/h / 24 m	51505Q0040	51505Q0040	25.740,00
AWALIFT 1/2	5,5 kW – 3000	55	20 m3/h / 26,5 m	51505P0040	51505P0040	25.740,00
AWALIFT 1/2	5,5 kW – 3000	55	20 m3/h / 27 m	5150500040	5150500040	25.740,00
AWALIFT 1/2	5,5 kW – 3000	55	20 m3/h / 29,5 m	51505N0040	51505N0040	25.740,00
AWALIFT 1/2	5,5 kW – 3000	55	20 m3/h / 32 m	51505M0040	51505M0040	25.740,00
AWALIFT 1/2	5,5 kW – 3000	55	20 m3/h / 33 m	51505L0040	51505L0040	25.740,00
AWALIFT 1/2	7,5 kW – 3000	55	20 m3/h / 32 m	51510M0040	51510M0040	26.245,00
AWALIFT 1/2	7,5 kW – 3000	55	20 m3/h / 34 m	51510L0040	51510L0040	26.245,00
AWALIFT 1/2	7,5 kW – 3000	55	20 m3/h / 37 m	51510K0040	51510K0040	26.245,00
AWALIFT 1/2	7,5 kW – 3000	55	20 m3/h / 40 m	51510J0040	51510J0040	26.245,00
AWALIFT 1/2	7,5 kW – 3000	55	20 m3/h / 43 m	51510I0040	51510I0040	26.245,00
AWALIFT 1/2	11 kW – 3000	55	20 m3/h / < 60 m	please contact us		
PRICE FOR AWALIFT WITH INLET FLANGE DN 150 RIGHT; LEVEL MEASUREMENT: SR						
AWALIFT 1/2	1,5 kW – 1500	67	20 m3/h / 9 m	5150200330	5150200330	21.675,00
AWALIFT 1/2	2,2 kW – 1500	67	20 m3/h / 13 m	5150300330	5150300330	22.135,00
AWALIFT 1/2	3 kW – 1500	67	20 m3/h / 17 m	5150400330	5150400330	22.250,00
AWALIFT 1/2	3 kW – 3000	67	20 m3/h / 17 m	5150450330	5150450330	22.455,00
AWALIFT 1/2	4 kW – 3000	55	20 m3/h / 22,5 m	51514B0330	51514B0330	22.765,00
AWALIFT 1/2	4 kW – 3000	55	20 m3/h / 24,5 m	51514A0330	51514A0330	22.765,00
AWALIFT 1/2	5,5 kW – 3000	55	20 m3/h / 24 m	51505Q0330	51505Q0330	25.095,00
AWALIFT 1/2	5,5 kW – 3000	55	20 m3/h / 26,5 m	51505P0330	51505P0330	25.095,00
AWALIFT 1/2	5,5 kW – 3000	55	20 m3/h / 27 m	5150500330	5150500330	25.095,00
AWALIFT 1/2	5,5 kW – 3000	55	20 m3/h / 29,5 m	51505N0330	51505N0330	25.095,00
AWALIFT 1/2	5,5 kW – 3000	55	20 m3/h / 32 m	51505M0330	51505M0330	25.095,00
AWALIFT 1/2	5,5 kW – 3000	55	20 m3/h / 33 m	51505L0330	51505L0330	25.095,00
AWALIFT 1/2	7,5 kW – 3000	55	20 m3/h / 32 m	51510M0330	51510M0330	25.525,00

SEWAGE PUMPING STATIONS

AWALIFT 1/2 FOR PUBLIC BUILDINGS AND MUNICIPAL APPLICATIONS

TYPE	ENGINE	IP	PERFOR-MANCE QP [M3/H] / HMAX [M]	MAT.-NR.	TALIS-CODE	PRICE (€)
AWALIFT 1/2	7,5 kW – 3000	55	20 m3/h / 34 m	51510L0330	51510L0330	**25.525,00**
AWALIFT 1/2	7,5 kW – 3000	55	20 m3/h / 37 m	51510K0330	51510K0330	**25.525,00**
AWALIFT 1/2	7,5 kW – 3000	55	20 m3/h / 40 m	51510J0330	51510J0330	**25.525,00**
AWALIFT 1/2	7,5 kW – 3000	55	20 m3/h / 43 m	51510I0330	51510I0330	**25.525,00**
AWALIFT 1/2	11 kW – 3000	55	20 m3/h / < 60 m	please contact us		
PRICE FOR AWALIFT WITH INLET FLANGE DN 150 RIGHT; LEVEL MEASUREMENT: AS						
AWALIFT 1/2	1,5 kW – 1500	67	20 m3/h / 9 m	5150200340	5150200340	**22.310,00**
AWALIFT 1/2	2,2 kW – 1500	67	20 m3/h / 13 m	5150300340	5150300340	**22.785,00**
AWALIFT 1/2	3 kW – 1500	67	20 m3/h / 17 m	5150400340	5150400340	**22.890,00**
AWALIFT 1/2	3 kW – 3000	67	20 m3/h / 17 m	5150450340	5150450340	**23.105,00**
AWALIFT 1/2	4 kW – 3000	55	20 m3/h / 22,5 m	51514B0340	51514B0340	**23.395,00**
AWALIFT 1/2	4 kW – 3000	55	20 m3/h / 24,5 m	51514A0340	51514A0340	**23.395,00**
AWALIFT 1/2	5,5 kW – 3000	55	20 m3/h / 24 m	51505Q0340	51505Q0340	**25.740,00**
AWALIFT 1/2	5,5 kW – 3000	55	20 m3/h / 26,5 m	51505P0340	51505P0340	**25.740,00**
AWALIFT 1/2	5,5 kW – 3000	55	20 m3/h / 27 m	51505O0340	51505O0340	**25.740,00**
AWALIFT 1/2	5,5 kW – 3000	55	20 m3/h / 29,5 m	51505N0340	51505N0340	**25.740,00**
AWALIFT 1/2	5,5 kW – 3000	55	20 m3/h / 32 m	51505M0340	51505M0340	**25.740,00**
AWALIFT 1/2	5,5 kW – 3000	55	20 m3/h / 33 m	51505L0340	51505L0340	**25.740,00**
AWALIFT 1/2	7,5 kW – 3000	55	20 m3/h / 32 m	51510M0340	51510M0340	**26.245,00**
AWALIFT 1/2	7,5 kW – 3000	55	20 m3/h / 34 m	515105L340	515105L340	**26.245,00**
AWALIFT 1/2	7,5 kW – 3000	55	20 m3/h / 37 m	51510K0340	51510K0340	**26.245,00**
AWALIFT 1/2	7,5 kW – 3000	55	20 m3/h / 40 m	51510J0340	51510J0340	**26.245,00**
AWALIFT 1/2	7,5 kW – 3000	55	20 m3/h / 43 m	51510I0340	51510I0340	**26.245,00**
AWALIFT 1/2	11 kW – 3000	55	20 m3/h / < 60 m	please contact us		
PRICE FOR AWALIFT WITH INLET FLANGE DN 200 LEFT; LEVEL MEASUREMENT: SR						
AWALIFT 1/2	1,5 kW – 1500	67	20 m3/h / 9 m	5150200130	5150200130	**21.715,00**
AWALIFT 1/2	2,2 kW – 1500	67	20 m3/h / 13 m	5150300130	5150300130	**22.200,00**

AWALIFT 1/2 FOR PUBLIC BUILDINGS AND MUNICIPAL APPLICATIONS

TYPE	ENGINE	IP	PERFOR-MANCE QP [M3/H] / HMAX [M]	MAT.-NR.	TALIS-CODE	PRICE (€)
AWALIFT 1/2	3 kW – 1500	67	20 m3/h / 17 m	5150400130	5150400130	22.300,00
AWALIFT 1/2	3 kW – 3000	67	20 m3/h / 17 m	5150450130	5150450130	22.500,00
AWALIFT 1/2	4 kW – 3000	55	20 m3/h / 22,5 m	51514B0130	51514B0130	22.805,00
AWALIFT 1/2	4 kW – 3000	55	20 m3/h / 24,5 m	51514A0130	51514A0130	22.805,00
AWALIFT 1/2	5,5 kW – 3000	55	20 m3/h / 24 m	51505Q0130	51505Q0130	25.115,00
AWALIFT 1/2	5,5 kW – 3000	55	20 m3/h / 26,5 m	51505P0130	51505P0130	25.115,00
AWALIFT 1/2	5,5 kW – 3000	55	20 m3/h / 27 m	51505O0130	51505O0130	25.115,00
AWALIFT 1/2	5,5 kW – 3000	55	20 m3/h / 29,5 m	51505N0130	51505N0130	25.115,00
AWALIFT 1/2	5,5 kW – 3000	55	20 m3/h / 32 m	51505M0130	51505M0130	25.115,00
AWALIFT 1/2	5,5 kW – 3000	55	20 m3/h / 33 m	51505L0130	51505L0130	25.115,00
AWALIFT 1/2	7,5 kW – 3000	55	20 m3/h / 32 m	51510M0130	51510M0130	25.650,00
AWALIFT 1/2	7,5 kW – 3000	55	20 m3/h / 34 m	51510L0130	51510L0130	25.650,00
AWALIFT 1/2	7,5 kW – 3000	55	20 m3/h / 37 m	51510K0130	51510K0130	25.650,00
AWALIFT 1/2	7,5 kW – 3000	55	20 m3/h / 40 m	51510J0130	51510J0130	25.650,00
AWALIFT 1/2	7,5 kW – 3000	55	20 m3/h / 43 m	51510I0130	51510I0130	25.650,00
AWALIFT 1/2	11 kW – 3000	55	20 m3/h / < 60 m	5151200030	5151200030	36.205,00
PRICE FOR AWALIFT WITH INLET FLANGE DN 200 LEFT; LEVEL MEASUREMENT: AS						
AWALIFT 1/2	1,5 kW – 1500	67	20 m3/h / 9 m	5150200140	5150200140	22.365,00
AWALIFT 1/2	2,2 kW – 1500	67	20 m3/h / 13 m	5150300140	5150300140	22.825,00
AWALIFT 1/2	3 kW – 1500	67	20 m3/h / 17 m	5150400140	5150400140	22.950,00
AWALIFT 1/2	3 kW – 3000	67	20 m3/h / 17 m	5150450140	5150450140	23.155,00
AWALIFT 1/2	4 kW – 3000	55	20 m3/h / 22,5 m	51514B0140	51514B0140	23.465,00
AWALIFT 1/2	4 kW – 3000	55	20 m3/h / 24,5 m	51514A0140	51514A0140	23.465,00
AWALIFT 1/2	5,5 kW – 3000	55	20 m3/h / 24 m	51505Q0140	51505Q0140	25.775,00
AWALIFT 1/2	5,5 kW – 3000	55	20 m3/h / 26,5 m	51505P0140	51505P0140	25.775,00
AWALIFT 1/2	5,5 kW – 3000	55	20 m3/h / 27 m	51505O0140	51505O0140	25.775,00

SEWAGE PUMPING STATIONS

AWALIFT 1/2 FOR PUBLIC BUILDINGS AND MUNICIPAL APPLICATIONS

TYPE	ENGINE	IP	PERFOR-MANCE QP [M3/H] / HMAX [M]	MAT.-NR.	TALIS-CODE	PRICE (€)
AWALIFT 1/2	5,5 kW – 3000	55	20 m3/h / 29,5 m	51505N0140	51505N0140	**25.775,00**
AWALIFT 1/2	5,5 kW – 3000	55	20 m3/h / 32 m	51505M0140	51505M0140	**25.775,00**
AWALIFT 1/2	5,5 kW – 3000	55	20 m3/h / 33 m	51505L0140	51505L0140	**25.775,00**
AWALIFT 1/2	7,5 kW – 3000	55	20 m3/h / 32 m	51510M0140	51510M0140	**26.300,00**
AWALIFT 1/2	7,5 kW – 3000	55	20 m3/h / 34 m	51510L0140	51510L0140	**26.300,00**
AWALIFT 1/2	7,5 kW – 3000	55	20 m3/h / 37 m	51510K0140	51510K0140	**26.300,00**
AWALIFT 1/2	7,5 kW – 3000	55	20 m3/h / 40 m	51510J0140	51510J0140	**26.300,00**
AWALIFT 1/2	7,5 kW – 3000	55	20 m3/h / 43 m	51510I0140	51510I0140	**26.300,00**
AWALIFT 1/2	11 kW – 3000	55	20 m3/h / < 60 m	5151200040	5151200040	**36.855,00**
PRICE FOR AWALIFT WITH INLET FLANGE DN 200 RIGHT; LEVEL MEASUREMENT: SR						
AWALIFT 1/2	1,5 kW – 1500	67	20 m3/h / 9 m	5150204430	5150204430	**21.715,00**
AWALIFT 1/2	2,2 kW – 1500	67	20 m3/h / 13 m	5150300430	5150300430	**22.200,00**
AWALIFT 1/2	3 kW – 1500	67	20 m3/h / 17 m	5150400430	5150400430	**22.300,00**
AWALIFT 1/2	3 kW – 3000	67	20 m3/h / 17 m	5150450430	5150450430	**22.500,00**
AWALIFT 1/2	4 kW – 3000	55	20 m3/h / 22,5 m	51514B0430	51514B0430	**22.805,00**
AWALIFT 1/2	4 kW – 3000	55	20 m3/h / 24,5 m	51514A0430	51514A0430	**22.805,00**
AWALIFT 1/2	5,5 kW – 3000	55	20 m3/h / 24 m	51505Q0430	51505Q0430	**25.115,00**
AWALIFT 1/2	5,5 kW – 3000	55	20 m3/h / 26,5 m	51505P0430	51505P0430	**25.115,00**
AWALIFT 1/2	5,5 kW – 3000	55	20 m3/h / 27 m	51505O0430	51505O0430	**25.115,00**
AWALIFT 1/2	5,5 kW – 3000	55	20 m3/h / 29,5 m	51505N0430	51505N0430	**25.115,00**
AWALIFT 1/2	5,5 kW – 3000	55	20 m3/h / 32 m	51505M0430	51505M0430	**25.115,00**
AWALIFT 1/2	5,5 kW – 3000	55	20 m3/h / 33 m	51505L0430	51505L0430	**25.115,00**
AWALIFT 1/2	7,5 kW – 3000	55	20 m3/h / 32 m	51510M0430	51510M0430	**25.650,00**
AWALIFT 1/2	7,5 kW – 3000	55	20 m3/h / 34 m	51510L0430	51510L0430	**25.650,00**
AWALIFT 1/2	7,5 kW – 3000	55	20 m3/h / 37 m	51510K0430	51510K0430	**25.650,00**
AWALIFT 1/2	7,5 kW – 3000	55	20 m3/h / 40 m	51510J0430	51510J0430	**25.650,00**

AWALIFT 1/2 FOR PUBLIC BUILDINGS AND MUNICIPAL APPLICATIONS

TYPE	ENGINE	IP	PERFOR-MANCE QP [M3/H] / HMAX [M]	MAT.-NR.	TALIS-CODE	PRICE (€)
AWALIFT 1/2	7,5 kW – 3000	55	20 m3/h / 43 m	51510I0430	51510I0430	**25.650,00**
AWALIFT 1/2	11 kW – 3000	55	20 m3/h / < 60 m	5151200430	5151200430	**36.205,00**
PRICE FOR AWALIFT WITH INLET FLANGE DN 200 RIGHT; LEVEL MEASUREMENT: AS						
AWALIFT 1/2	1,5 kW – 1500	67	20 m3/h / 9 m	5150200440	5150200440	**22.365,00**
AWALIFT 1/2	2,2 kW – 1500	67	20 m3/h / 13 m	5150300440	5150300440	**22.825,00**
AWALIFT 1/2	3 kW – 1500	67	20 m3/h / 17 m	5150400440	5150400440	**22.950,00**
AWALIFT 1/2	3 kW – 3000	67	20 m3/h / 17 m	5150450440	5150450440	**23.155,00**
AWALIFT 1/2	4 kW – 3000	55	20 m3/h / 22,5 m	51514B0440	51514B0440	**23.465,00**
AWALIFT 1/2	4 kW – 3000	55	20 m3/h / 24,5 m	51514A0440	51514A0440	**23.465,00**
AWALIFT 1/2	5,5 kW – 3000	55	20 m3/h / 24 m	51505Q0440	51505Q0440	**25.775,00**
AWALIFT 1/2	5,5 kW – 3000	55	20 m3/h / 26,5 m	51505P0440	51505P0440	**25.775,00**
AWALIFT 1/2	5,5 kW – 3000	55	20 m3/h / 27 m	5150500440	5150500440	**25.775,00**
AWALIFT 1/2	5,5 kW – 3000	55	20 m3/h / 29,5 m	51505N0440	51505N0440	**25.775,00**
AWALIFT 1/2	5,5 kW – 3000	55	20 m3/h / 32 m	51505M0440	51505M0440	**25.775,00**
AWALIFT 1/2	5,5 kW – 3000	55	20 m3/h / 33 m	51505L0440	51505L0440	**25.775,00**
AWALIFT 1/2	7,5 kW – 3000	55	20 m3/h / 32 m	51510M0440	51510M0440	**26.300,00**
AWALIFT 1/2	7,5 kW – 3000	55	20 m3/h / 34 m	51510L0440	51510L0440	**26.300,00**
AWALIFT 1/2	7,5 kW – 3000	55	20 m3/h / 37 m	51510K0440	51510K0440	**26.300,00**
AWALIFT 1/2	7,5 kW – 3000	55	20 m3/h / 40 m	51510J0440	51510J0440	**26.300,00**
AWALIFT 1/2	7,5 kW – 3000	55	20 m3/h / 43 m	51510I0440	51510I0440	**26.300,00**
AWALIFT 1/2	11 kW – 3000	55	20 m3/h / < 60 m	5151200440	5151200440	**36.855,00**

SEWAGE PUMPING STATIONS

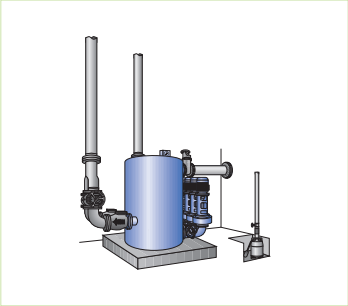

SERIES **AWALIFT 1/2X2**

AWALIFT 1/2X2

STRATE RANGE

FOR MUNICIPAL APPLICATIONS

- Plant capacity: 15 m3/h raw sewage - 750 P.E.
- Pumping head: up to 120 mWS
- Free ball passage: 100 mm
- Container dimensions: D = 1000 mm, H = 1250 mm
- Container capacity: 785 l
- Weight: about 650 kg

Scope of delivery

- A container with two seperator systems
- Four centrifugal pumps ST(M)65/80, motors according to type characteristics and duty point
- Four pump gate valves
- A Y-branch pipe
- Two STRATE non-return valves
- Two gate valves
- Level measurement

Options

- Pump control
- Piping including reducing and transition flanges inside the building
- Alarm and monitoring systems see control technology
- Inductive volume measurement
- Emergency power generator
- STRATE Ventilation systems for the pressure pipe
- STRATE AWALIFT Shaft
- STRATE Service building
- STRATE Installation and maintenance
- STRATE Ventilation and bleeding valves
- EVU-house connection

Special accessories according to your requirements

Please contact us.

Scope of application:

- Drainage of small villages up to approx. 750 inhabitants, which cannot be drained with natural slope
- Drainage for higher heads and longer pressure lines
- As intermediate pumping station within a pressure drainage system
- Residential and industrial areas
- Localities
- Infrastructure objects, such as airports, industrial parks, underground stations, etc.

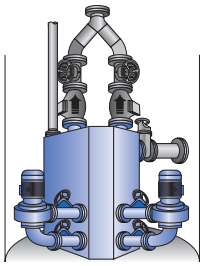

SERIES **AWALIFT 1/2 PENTA**

AWALIFT 1/2 PENTA

FOR MUNICIPAL APPLICATIONS

STRATE RANGE

- Plant capacity: 20 m3/h raw sewage – 1000 P.E.
- Pumping head: up to 70 mWS
- Free ball passage: 100 mm
- Container dimensions: R = 890 mm, H = 1250 mm
- Container capacity: 650 l
- Weight: about 525 kg

Scope of delivery

- A container with two seperator systems
- Two centrifugal pumps, motors according to type characteristics and duty point
- Four pump gate valves
- Two STRATE non-return valves AWASTOP DN 100 K
- A Y-branch pipe DN 100
- Two pressure pipe gate valves DN 100
- Level measurement

Options

- Pump control
- Piping including reducing and transition flanges inside the building
- Alarm and monitoring systems see control technology
- Inductive volume measurement
- Emergency power generator
- STRATE Ventilation systems for the pressure pipe
- STRATE AWALIFT Shaft
- STRATE Service building
- STRATE Installation and maintenance
- STRATE Ventilation and bleeding valves
- EVU-house connection

Special accessories according to your requirements

Please contact us.

Scope of application:
- Large system capacity with low space requirements:
- The plant is installed directly at the shaft wall
- Therefore small shaft diameter possible
- Larger buildings, industrial plants, individual streets
- Objects that cannot be drained with natural slope
- As protection against backflow damage
- Infrastructure objects, such as airports, industrial parks, underground stations, etc.

SEWAGE PUMPING STATIONS

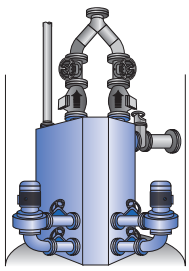

SERIES **AWALIFT 2/2 PENTA**

AWALIFT 2/2 PENTA 25 M³/H

STRATE RANGE

FOR MUNICIPAL APPLICATIONS

- Plant capacity: 25 m3/h raw sewage – 1200 P.E.
- Pumping head: up to 70 mWS
- Free ball passage: 100 mm
- Container dimensions: R = 990 mm, H = 1500 mm
- Container capacity: 1,4 m³
- Weight: about 800 kg

Scope of delivery

- A container with two seperator systems
- Two centrifugal pumps, motors according to type characteristics and duty point
- Four pump gate valves
- Two STRATE non-return valves
- A Y-branch pipe DN 100
- Two pressure pipe gate valves DN 100
- Level measurement

Options

- Pump control
- Inlet gate valve DN 200
- Piping incl. reducing and transition flanges inside the building
- Pig trap
- Basement drainage pump
- Alarm and monitoring systems see control technology
- Inductive volume measurement
- Emergency power generator
- STRATE Ventilation systems for the pressure pipe
- STRATE AWALIFT Shaft
- STRATE Service building
- STRATE Installation and maintenance

Special accessories according to your requirements

Please contact us.

Scope of application:

- Drainage of small villages up to approx. 1200 Inhabitants that cannot be drained using natural gradient or as an intermediate pumping station within a pressure drainage system
- Large plant capacity with low space requirement (installation directly at shaft wall possible, therefore small shaft diameter required)
- Residential and industrial areas
- Infrastructure objects, such as airports, industrial parks, underground stations, etc.
- Localities
- Local authorities

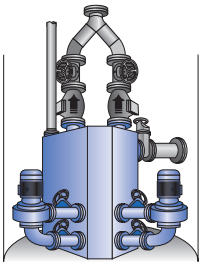

SERIES **AWALIFT 2/2 PENTA**

STRATE RANGE

AWALIFT 2/2 PENTA 36 M³/H

FOR MUNICIPAL APPLICATIONS

- Plant capacity: 36 m3/h raw sewage – 1700 P.E.
- Pumping head: up to 80 mWS
- Free ball passage: 100 mm
- Container dimensions: R = 990 mm, H = 1500 mm
- Container capacity: 1,4 m³
- Weight: about 800 kg

Scope of delivery

- A container with two seperator systems
- Two centrifugal pumps, motors according to type characteristics and duty point
- Four pump gate valves
- Two STRATE non-return valves
- A Y-branch pipe DN 100
- Two pressure pipe gate valves DN 100
- Level measurement

Options

- Pump control
- Inlet gate valve DN 200
- Piping incl. reducing and transition flanges inside the building
- Pig trap
- Basement drainage pump
- Alarm and monitoring systems see control technology
- Inductive volume measurement
- Emergency power generator
- STRATE Ventilation systems for the pressure pipe
- STRATE AWALIFT Shaft
- STRATE Service building
- STRATE Installation and maintenance

Special accessories according to your requirements

Please contact us.

Scope of application:

- Large plant capacity with low space requirement (installation directly at shaft wall possible, therefore small shaft diameter required)
- Residential and industrial areas
- Localities
- Local authorities
- Infrastructure objects, such as airports, industrial parks, underground stations, etc.

SEWAGE PUMPING STATIONS

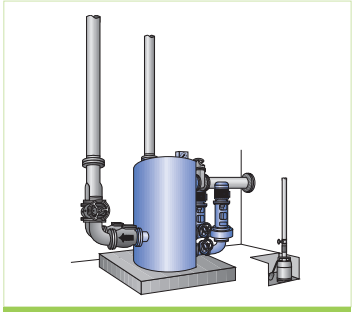

SERIES **AWALIFT 2/2 FLAT**

AWALIFT 2/2 FLAT
FOR MUNICIPAL APPLICATIONS

STRATE RANGE

- Plant capacity: 36 m3/h raw sewage, 1700 P.E.
- Pumping head: up to 80 mWS
- Free ball passage: 100 mm
- Container dimensions: D = 1250 mm, flattened, H = 1500 mm
- Container capacity: 0,95 m³
- Weight: about 800 kg

Scope of delivery

- A container with two seperator systems
- Two centrifugal pumps, motors according to type characteristics and duty point
- Four pump gate valves
- Two STRATE non-return valves
- A Y-branch pipe DN 100
- Two pressure pipe gate valves DN 100
- Level measurement

Options

- Pump control
- Inlet gate valve DN 200
- Piping incl. reducing and transition flanges inside the building
- Pig trap
- Basement drainage pump
- Alarm and monitoring systems see control technology
- Inductive volume measurement
- Emergency power generator
- STRATE Ventilation systems for the pressure pipe
- STRATE AWALIFT Shaft
- STRATE Service building
- STRATE Installation and maintenance

Special accessories according to your requirements

Please contact us.

Scope of application:
Drainage of small settlements up to approx. 1700 inhabitants, which cannot be drained with natural gradient, or as intermediate pumping station within a pressure drainage system:

- residential and industrial areas
- Localities
- Local authorities
- Infrastructure objects, such as airports, industrial parks, underground stations, etc.

SERIES **AWALIFT 2/2 ROUND**

AWALIFT 2/2 ROUND

FOR MUNICIPAL APPLICATIONS

STRATE RANGE

- Plant capacity: 60 m3/h – 2800 EW
- Pumping head: up to 80 mWS
- Free ball passage: 100/125 mm
- Container dimensions: D = 1250 mm, H = 1500 mm
- Container capacity: 1,4 m³
- Weight: about 800 kg

Scope of delivery

- A container with two seperator systems
- Two centrifugal pumps, motors according to type characteristics and duty point
- Four pump gate valves
- Two STRATE non-return valves
- A Y-branch pipe DN 100
- Two pressure pipe gate valves DN 100
- Level measurement

Options

- Pump control
- Inlet gate valve DN 200
- Piping incl. reducing and transition flanges inside the building
- Pig trap
- Basement drainage pump
- Alarm and monitoring systems see control technology
- Inductive volume measurement
- Emergency power generator
- STRATE Ventilation systems for the pressure pipe
- STRATE AWALIFT Shaft
- STRATE Service building
- STRATE Installation and maintenance

Special accessories according to your requirements

Please contact us.

Scope of application:
Drainage of small settlements up to approx. 2800 inhabitants, which cannot be drained with natural gradient, or as intermediate pumping station within a pressure drainage system:

- residential and industrial areas
- Localities
- Local authorities
- Infrastructure objects, such as airports, industrial parks, underground stations, etc.

SEWAGE PUMPING STATIONS

SERIES **AWALIFT 2/2X2**

AWALIFT 2/2X2

STRATE RANGE

FOR MUNICIPAL APPLICATIONS

- Plant capacity: 60 m3/h – 2800 EW
- Pumping head: up to 120 mWS
- Free ball passage: 100/125 mm
- Container dimensions: D = 1250 mm, H = 1500 mm
- Container capacity: 1,4 m³
- Weight: about 800 kg

Scope of delivery

- A container with two seperator systems
- 2 x 2 centrifugal pumps, motors according to type characteristics and duty point
- Four pump gate valves
- Two STRATE non-return valves
- A Y-branch pipe DN 100
- Two pressure pipe gate valves DN 100
- Level measurement

Options

- Pump control
- Inlet gate valve DN 200
- Piping incl. reducing and transition flanges inside the building
- Pig trap
- Basement drainage pump
- Alarm and monitoring systems see control technology
- Inductive volume measurement
- Emergency power generator
- STRATE Ventilation systems for the pressure pipe
- STRATE AWALIFT Shaft
- STRATE Service building
- STRATE Installation and maintenance

Special accessories according to your requirements

Please contact us.

Drainage of small settlements up to approx. 2800 inhabitants, which cannot be drained with natural gradient, or as intermediate pumping station within a pressure drainage system:

- residential and industrial areas
- Localities
- Local authorities
- Infrastructure objects, such as airports, industrial parks, underground stations, etc.

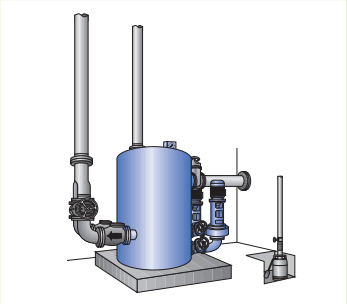

SERIES **AWALIFT 3/2**

AWALIFT 3/2

FOR MUNICIPAL APPLICATIONS

STRATE RANGE

- Plant capacity: 80 m3/h – 3700 EW
- Pumping head: up to 80 mWS / 3/2x2 up to 120 mWS
- Free ball passage: 125 mm
- Container dimensions (L x B x H): D = 1400 mm, H = 2000 mm
- Container capacity: 2,4 m³
- Weight: about 1000 kg

Scope of delivery

- A container with two seperator systems
- Two centrifugal pumps, motors according to type characteristics and duty point
- Four pump gate valves
- Two STRATE non-return valves
- A Y-branch pipe DN 100
- Two pressure pipe gate valves DN 125
- Level measurement

Options

- Inlet gate valve DN 200
- Piping incl. reducing and transition flanges inside the building
- Pig trap
- Basement drainage pump
- Alarm and monitoring systems see control technology
- Inductive volume measurement
- Emergency power generator
- STRATE Ventilation systems for the pressure pipe
- STRATE AWALIFT Shaft
- STRATE Service building
- STRATE Installation and maintenance

Special accessories according to your requirements

Please contact us.

Drainage of small settlements up to approx. 3700 inhabitants, which cannot be drained with natural gradient, or as intermediate pumping station within a pressure drainage system:

- residential and industrial areas
- Localities
- Local authorities
- Infrastructure objects, such as airports, industrial parks, underground stations, etc.

SEWAGE PUMPING STATIONS

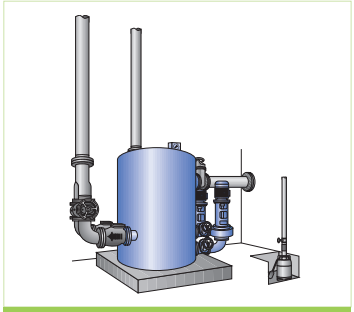

SERIES **AWALIFT 4/2**

AWALIFT 4/2

STRATE RANGE

FOR MUNICIPAL APPLICATIONS

- Plant capacity: 120 m3/h – 5600 EW
- Pumping head: up to 55 mWS / 4/2x2 up to 110 mWS
- Free ball passage: 150 mm
- Container dimensions: D = 1800 mm, H = 2000 mm
- Container capacity: 4,0 m³
- Weight: about 1500 kg

Scope of delivery

- A container with two seperator systems
- Two centrifugal pumps, motors according to type characteristics and duty point
- Four pump gate valves
- Two STRATE non-return valves
- A Y-branch pipe DN 100
- Two pressure pipe gate valves DN 150
- Level measurement

Options

- Pump control
- Inlet gate valve DN 250
- Piping incl. reducing and transition flanges inside the building
- Pig trap
- Basement drainage pump
- Alarm and monitoring systems see control technology
- Inductive volume measurement
- Emergency power generator
- STRATE Ventilation systems for the pressure pipe
- STRATE AWALIFT Shaft
- STRATE Service building
- STRATE Installation and maintenance

Special accessories according to your requirements

Please contact us.

Drainage of settlements up to 5600 inhabitants which cannot be drained with natural gradient or as intermediate pumping station within a pressure drainage system:

- residential and industrial areas
- Localities
- Local authorities
- Infrastructure objects, such as airports, industrial parks, underground stations, etc.

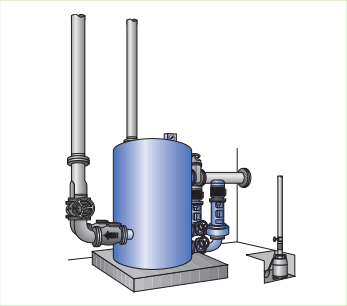

SERIES **AWALIFT 5/2**

STRATE RANGE

AWALIFT 5/2

FOR MUNICIPAL APPLICATIONS

- Plant capacity: 150 m3/h – 7000 EW
- Pumping head: up to 50 mWS / 5/2x2 up to 100 mWS
- Free ball passage: 150 mm
- Container dimensions: D = 1800 mm, H = 2500 mm
- Container capacity: 4,8 m³
- Weight: about 1700 kg

Scope of delivery

- A container with two seperator systems
- Two centrifugal pumps, motors according to type characteristics and duty point
- Four pump gate valves
- Two STRATE non-return valves
- Two pressure pipe gate valves DN 150
- A Y-branch pipe DN 100
- Level measurement

Options

- Pump control
- Inlet gate valve DN 250
- Piping incl. reducing and transition flanges inside the building
- Pig trap
- Basement drainage pump
- Alarm and monitoring systems see control technology
- Inductive volume measurement
- Emergency power generator
- STRATE Ventilation systems for the pressure pipe
- STRATE AWALIFT Shaft
- STRATE Service building
- STRATE Installation and maintenance

Special accessories according to your requirements

Please contact us.

Drainage of settlements up to 7000 inhabitants which cannot be drained with natural gradient, or as an intermediate pumping station within a pressure drainage system:

- residential and industrial areas
- Localities
- Local authorities
- Infrastructure objects, such as airports, industrial parks, underground stations, etc.

SEWAGE PUMPING STATIONS

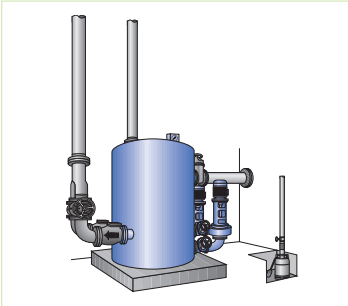

SERIES **AWALIFT 6/2**

AWALIFT 6/2

STRATE RANGE

FOR MUNICIPAL APPLICATIONS

- Plant capacity: 200 m3/h – 9300 EW
- Pumping head: up to 48 mWS / 6/2x2 up to 96 mWS
- Free ball passage: 200 mm
- Container dimensions: D = 2000 mm, H = 2500 mm
- Container capacity: 6,0 m³
- Weight: about 2000 kg

Scope of delivery

- A container with two seperator systems
- Two centrifugal pumps, motors according to type characteristics and duty point
- Four pump gate valves
- Two STRATE non-return valves
- Two pressure pipe gate valves DN 200
- A Y-branch pipe DN 200
- Level measurement

Options

- Pump control
- Inlet gate valve DN 250
- Piping incl. reducing and transition flanges inside the building
- Pig trap
- Basement drainage pump
- Alarm and monitoring systems see control technology
- Inductive volume measurement
- Emergency power generator
- STRATE Ventilation systems for the pressure pipe
- STRATE AWALIFT Shaft
- STRATE Service building
- STRATE Installation and maintenance

Special accessories according to your requirements

Please contact us.

Drainage of settlements up to 9300 inhabitants which cannot be drained with natural gradient or as intermediate pumping station within a pressure drainage system:

- residential and industrial areas
- Localities
- Local authorities
- Infrastructure objects, such as airports, industrial parks, underground railway networks etc.

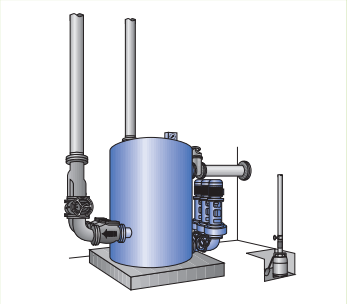

SERIES **AWALIFT 6/3**

AWALIFT 6/3

FOR MUNICIPAL APPLICATIONS

STRATE RANGE

- Plant capacity: 250 m3/h – 11600 EW
- Pumping head: up to 48 mWS / 6/3x2 up to 96 mWS
- Free ball passage: 150 mm
- Container dimensions: D = 2000 mm, H = 2500 mm
- Container capacity: 6,0 m³
- Weight: about 2300 kg

Scope of delivery

- A container with three seperator systems
- Three centrifugal pumps, motors according to type characteristics and duty point
- Six pump gate valves
- Three STRATE non-return valves
- Three pressure pipe gate valves DN 200
- A Y-branch pipe DN 200
- Level measurement

Options

- Pump control
- Inlet gate valve DN 250
- Piping incl. reducing and transition flanges inside the building
- Pig trap
- Basement drainage pump
- Alarm and monitoring systems see control technology
- Inductive volume measurement
- Emergency power generator
- STRATE Ventilation systems for the pressure pipe
- STRATE AWALIFT Shaft
- STRATE Service building
- STRATE Installation and maintenance

Special accessories according to your requirements

Please contact us.

Drainage of cities up to 11,600 inhabitants which cannot be drained with natural gradient or as intermediate pumping station within a pressure drainage system:

- residential and industrial areas
- Localities
- Local authorities
- Infrastructure objects, such as airports, industrial parks, underground railway networks etc.

SEWAGE PUMPING STATIONS

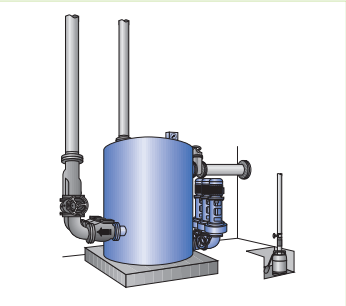

SERIES **AWALIFT 7/3**

AWALIFT 7/3

STRATE RANGE

FOR MUNICIPAL APPLICATIONS

- Plant capacity: 350 m3/h – 16300 EW
- Pumping head: up to 40 mWS / 7/3x2 up to 80 mWS
- Free ball passage: 200 mm
- Container dimensions: D = 2500 mm, H = 2500 mm
- Container capacity: 9,0 m³
- Weight: about 3500 kg

Scope of delivery

- A container with three seperator systems
- Three centrifugal pumps, motors according to type characteristics and duty point
- Six pump gate valves
- Three STRATE non-return valves
- Three pressure pipe gate valves DN 250
- A Y-branch pipe DN 250
- Level measurement

Options

- Pump control
- Inlet gate valve DN 350
- Piping incl. reducing and transition flanges inside the building
- Pig trap
- Basement drainage pump
- Alarm and monitoring systems see control technology
- Inductive volume measurement
- Emergency power generator
- STRATE Ventilation systems for the pressure pipe
- STRATE AWALIFT Shaft
- STRATE Service building
- STRATE Installation and maintenance

Special accessories according to your requirements

Please contact us.

Drainage of cities up to 16,300 inhabitants which cannot be drained with natural gradient or as intermediate pumping station within a pressure drainage system:

- residential and industrial areas
- Localities
- Local authorities
- Infrastructure objects, such as airports, industrial parks, underground railway networks etc.

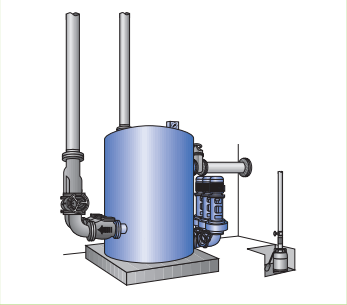

SERIES **AWALIFT 8/3**

AWALIFT 8/3

FOR MUNICIPAL APPLICATIONS

STRATE RANGE

- Plant capacity: 400 m3/h – 18600 EW
- Pumping head: up to 40 mWS / 7/3x2 bis 80 mWS
- Free ball passage: 200 mm
- Container dimensions: D = 2500 mm, H = 3000 mm
- Container capacity: 11,0 m³
- Weight: about 3800 kg

Scope of delivery

- A container with three seperator systems
- Three centrifugal pumps, motors according to type characteristics and duty point
- Six pump gate valves
- Three STRATE non-return valves
- Three pressure pipe gate valves DN 250
- A Y-branch pipe DN 250
- Level measurement

Options

- Pump control
- Inlet gate valve DN 350
- Piping incl. reducing and transition flanges inside the building
- Pig trap
- Basement drainage pump
- Alarm and monitoring systems see control technology
- Inductive volume measurement
- Emergency power generator
- STRATE Ventilation systems for the pressure pipe
- STRATE AWALIFT Shaft
- STRATE Service building
- STRATE Installation and maintenance

Special accessories according to your requirements

Please contact us.

Drainage of cities up to approx. 18,600 inhabitants, which cannot be drained with natural gradient, or as intermediate pumping station within a pressure drainage system:

- residential and industrial areas
- Localities
- Local authorities
- Infrastructure objects, such as airports, industrial parks, underground railway networks etc.

SEWAGE PUMPING STATIONS

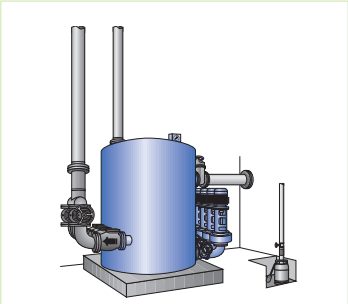

SERIES **AWALIFT 9/4**

AWALIFT 9/4

STRATE RANGE

FOR MUNICIPAL APPLICATIONS

- Plant capacity: 600 m3/h – 29000 EW
- Pumping head: up to 40 mWS / 9/4x2 up to 80 mWS
- Free ball passage: 200 mm
- Container dimensions: D = 2800 mm, H = 3000 mm
- Container capacity: 14,0 m³
- Weight: about 4500 kg

Scope of delivery

- A container with four seperator systems
- Four centrifugal pumps, motors according to type characteristics and duty point
- Eight pump gate valves
- Two STRATE non-return valves
- Two pressure pipe gate valves DN 300
- A Y-branch pipe DN 300
- Level measurement

Options

- Pump control
- Inlet gate valve DN 400
- Piping incl. reducing and transition flanges inside the building
- Pig trap
- Basement drainage pump
- Alarm and monitoring systems see control technology
- Inductive volume measurement
- Emergency power generator
- STRATE Ventilation systems for the pressure pipe
- STRATE AWALIFT Shaft
- STRATE Service building
- STRATE Installation and maintenance

Special accessories according to your requirements

Please contact us.

Drainage of cities up to approx. 29,000 inhabitants which cannot be drained with natural gradient or as intermediate pumping station within a pressure drainage system:

- residential and industrial areas
- Localities
- Local authorities
- Infrastructure objects, such as airports, industrial parks, underground railway networks etc.

SERIES **AWALIFTSCHACHT**

SHAFTS TYPE: GFK

FOR SEWAGE PUMPING STATIONS

STRATE RANGE

Scope of delivery

- STRATE AWALIFTSCHACHT prefabricated shafts are used in private, commercial and municipal areas where it is not possible to install the sewage lifting units within existing or planned buildings. Due to the different sizes of the pre-assembled.
- STRATE AWALIFT shafts, each individual AWALIFT sewage pumping station can be assigned a demand-optimised size. Possible installations of basement drainage pumps in pump sumps are considered in the shaft dimensions. Pipe and cable penetrations, which are arranged customer-specific in the manufacturing plant, meet all requirements regarding fitting accuracy, safety and ease of maintenance. Ideally, the installation of the electrical switchgear is carried out in a control room above the finished shaft.
- STRATE Service buildings in prefabricated construction; further installation possibilities are weatherproof outdoor cabinets or installations in adjacent existing company buildings.

Options

- Polyester outdoor cabinet, protection class IP55, fully equipped
- Reinforced concrete base plate with moulded pump sump
- Concrete compensation rings
- Special Coating
- System installation in prefabricated shaft
- ladder, fall protection, entrance aid
- AWASTATION Prefabricated service building

AWALIFT-SCHACHT	COVER PLATE (Ø MM)	COVER PLATE THICKNESS IN (MM)	WALL THICKNESS (MM)	BUOYANCY CONTROL (Ø MM)	TALIS-CODE	PRICE (€)
1000	1230	200	15	1300	please contact us	
1200	1500	200	20	1600	please contact us	
1500	1800	250	26	2000	please contact us	
1800	2140	250	29	2300	please contact us	
2000	2300	250	33	2500	please contact us	
2400	2830	250	37	3000	please contact us	
2900	3300	280	45	3300 x 3000	please contact us	

- Are the optimal system supplement for STRATE AWALIFT sewage water lifting units. The different sizes of STRATE pre-fabricated manholes ensure exactly the necessary space for maintenance work and offer the possibility of installing basement drainage pumps.
- are structurally made of high-quality, durable and waterproof materials with high specific strength and low weight, their design enables short assembly times and eliminates the need for complex constructions below the ground
- Are economical due to absolute fitting accuracy, high corrosion resistance and low purchase costs as series articles
- Can be aerated and deaerated by natural convection. Forced ventilation via tube fan is recommended

Sales and delivery conditions

Under the following link you will find our current sales and delivery conditions:

https://www.strate.com/terms.html

Please click on "Terms and conditions of sale and delivery".

Disclaimer & Reference to the SALES Terms & Conditions

This Price List and the contained information have been collected with utmost care and should serve for general information purposes but does not create any binding offer or contract.

The products of TALIS Management Holding GmbH and its affiliated companies ("TALIS") can only be purchased based on a separate Purchase Contract and the information provided in this Price List will only become part of the Purchase Contract if and as far
as specifically agreed in writing between the contracting parties and under the mandatory precondition, that the Customer has accepted the Terms & Conditions for Sale of the contracting TALIS Company which can be ordered by the Customer at:

TALIS Management Holding GmbH Legal Department
Meeboldstrasse 22
89522 Heidenheim
Germany

If the products are ordered by the Customer from TALIS according to the prices in the current valid Price List it deemed to be agreed between the contracting parties that the actual valid Terms & Conditions for Sales of the contracting TALIS Company are an integral part of the Purchase Contract.

TALIS endeavors to keep the information in this Price List correct and up to date but expressly reserves the right to add or delete products and/or make any additions or changes to the provided prices in the Price List without any notice to the users.

TALIS, however, does not bear
any liability with regard to the accuracy and completeness of
the information provided in this Price List and TALIS will in no event be liable to any party for any direct, indirect, special or other consequential damages for any use of this information.

STRATE Technologie für Abwasser GmbH
Im Kirchenfelde 9
D-31157 Sarstedt
FON +49 5066 988-0
FAX +49 5066 988-225
MAIL strate-info@talis-group.com
WEB www.strate.com